SYK®

Professional manufacturer

Our products don't Contain hazardous substance restricted by RoHS.)

Price List

For enquiry of price,please visit www.syk.tw

Index

- Order Guidance for Support unit 1
- Motor Bracket MBH 2
- Support Unit HF 3
- Motor Bracket MBCB12 / Motor Bracket MBCE12 4
- Motor Bracket MBCB15 8
- Motor Bracket MBCE(S)15 / MBCF(S)20 10
- Motor Bracket MBC25 14
- Motor Bracket MBA (Narrow type) 16
- Motor Bracket MBB (Low Narrow type) 17
- Motor Bracket MBL (Hidden type) 18
- Recommended shaft end shape (Fixed-side) for MBC types 19
- Morot Bracket MB and Corresponding motor reference table. 20
- Low profile Support unit LK (fixed-side rectangular type) 21
- Low profile Support Unit LF / LFA (supported-side rectangular type) 23
- Support Unit EK (fixed-side rectangular type) 25
- Support Unit EF (supported-side rectangular type) 28
- Support Unit BK (fixed-side rectangular type) 31
- Support Unit BF (Supported-side rectangular type) 33
- Support Unit FKA (fixed-side round type) 35
- Support Unit FK (fixed-side round type) 37
- Support Unit FF (Supported-side rectangular type) 41
- Support Unit AK(fixed-side rectangular type) 43
- Support Unit AF(supported-side rectangular type) 45
- Lock nut / Lock nut (Heavy-load) 47
- SBK type support Unit (Heavy-load) 50
- WBK type support Unit (Heavy-load) 52
- MBK type support Unit (Heavy-load) 54
- Nut Bracket MC 56
- Nut Bracket MGD 57
- Recommended shaft end shape (Fixed-side) 58
- Recommended shaft end shape(Supported-side) 60
- Ballscrew support unit equivalent interchangeable for major manufacturer 61
- Axial Positioning repeatability test 62
- Thrust Testing 63
- Salt Spray Test(72 Hours) 64
- Patent Product : Support unit (Type of Dropping Oil from Center) 65
- Bearings Life Testing 66

Example of identification number Support unit :

BK30B_C5 G N C A S M

❶ ❷ ❸ ❹ ❺ ❻ ❼ ❽

❶	B	Contact Angle B 40°
❷	C5	Accuracy Grade
❸	G	Grease Fitting
❹	N	Electroless Nickel Plating
❺	C	Clean Room Grease
❻	A	Aluminum
❼	S	Stainless Steel
❽	M	Custom made or with Motor Bracket

Example of identification number Motor bracket :

MBCB12-D N C J

❶ ❷ ❸ ❹ ❺

❶	B	Equivalent to BK type support unit
	E	Equivalent to EK type support unit
❷	D	Servo motor specification code
❸	N	Electroless Nickel Plating
❹	C	Clean Room Grease
❺		Taiwanese brand P5 bearing
	J	Japanese brand P5 bearings

Usage Note

- Do not disassemble the Support Unit of LK.EK,BK,FK,FKA,AK,CKD,MBC.
- The Bearing of LK.EK,BK,FK,FKA,AK,CKD,MBC are filled up grease.
- When inserting a screw shaft into Support Unit, take care to prevent peeling the oil-seal lip.

Order Guidance for Support Unit

Applicable BallScrew OD	Allowable Axial load (Kgf)	Static load (Kgf)	Limiting RPM (RPM)	Bearing	Applicable model	
					Fixed-side	Supported-side
Ø8	74	200	52800	706 A	FK06 EK06	FF06 EF06
Ø10~Ø12	103	280	40000	708 A	FK08 EK08 LK08	FF06 EF08 LF08 LFA12
Ø10~Ø15	195	530	24000	7000 A	BK10 FK10 LK10 EK10 AK10	BF10 FF10 LF12 LFA15 EF10 AF10
Ø14~Ø18	217	610	22000	7001 A	BK12 FK12 LK12 EK12 AK12 MBC*12	BF12 FF12 LF12 LFA15 EF12 AF12
Ø20	240	700	19000	7002 A	BK15 FK15 LK15 EK15 AK15 MBC*15	BF15 FF15 LF15 LFA20 EF15 AF15
	2240		6000	15TAC 47B	WBK15DF MBK15DF MBCS15	
Ø25~Ø28	413	1220	16000	7203 A	BK17 FK17	BF17 FF17
	428	1340	15000	7004 A	BK20	BF20
	587	1690	13000	7204 A	FK20 EK20 AK20 MBCF20	FF20 EF20 AF20 LFA25 (Apply to AK20)
	691	1560	9500	7204 B	FK20B EK20B AK20B	
	2240		6000	20TAC 47B	WBK20 DF MBK20DF MBCS20	BF20 FF20 EF20 AF20
Ø30~Ø36	709	2090	12000	7205 A	BK25 FK25 MBC25 AK25	BF25 FF25 AF25
	820	1920	8500	7205 B	BK25B FK25B AK25B	
	2910		4500	25TAC 62B	WBK25 DF	BF25 FF25 AF25
	4700				WBK25 DFD / DFF	
Ø40	939	3000	10000	7206 A	BK30 FK30	BF30 FF30
	1082	2760	7100	7206 B	BK30B FK30B	
	2980		4300	30TAC 62B	WBK30 DF	
	4850				WBK30 DFD / DFF	
Ø45	1466	3750	6000	7207 B	BK35	BF35
	3150		3600	35TAC 72B	WBK35 DF	
	5150				WBK35 DFD / DFF	
Ø50	1834	4700	5300	7208 B	BK40	BF40
	3250		3600	40TAC 72B	WBK40 DF	
	5250				WBK40 DFD / DFF	

Note:
If mounting type by Fixed-side and Fixed-side,the axial load need to multiplied by two.
(The digit of axial load and RPM in the table is for reference only,please refer to each brand's bearing catalogue for actual information)

Motor Bracket MBH

New Product

Pattern:MBH15-EP

Pattern:MBH15-D

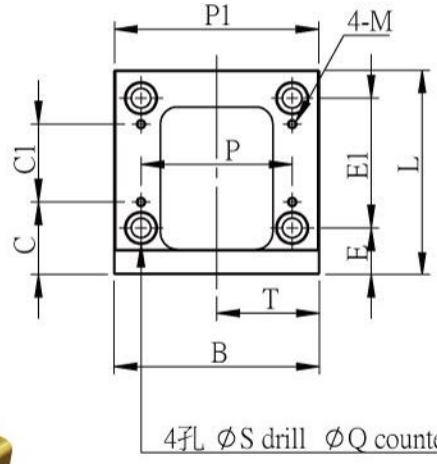

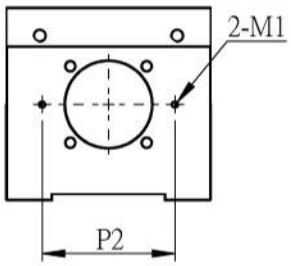

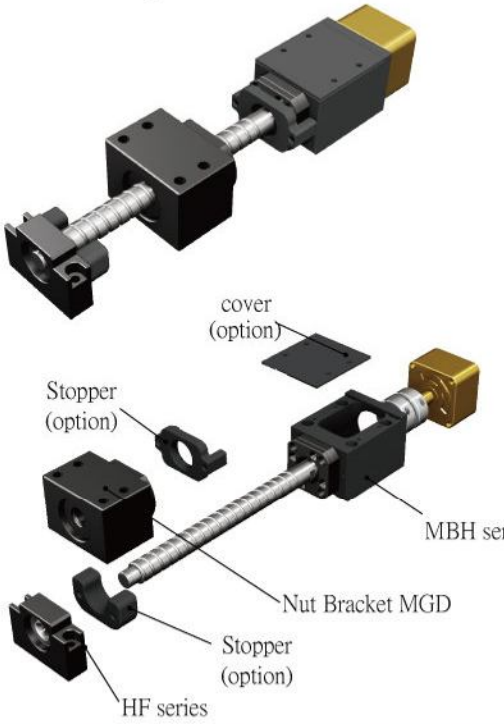

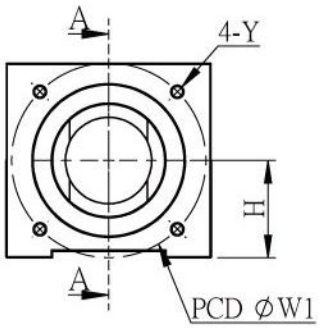

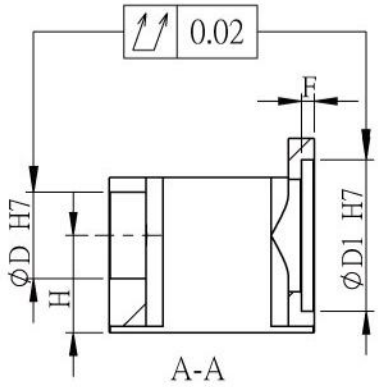

Unit : mm

Model No	D1	W1	Y	D	L	H ±0.02	B	T	P	S	Q	E
MBH15-D	50	70	M5	40	88	30	70	35	54	6.6	11	23
MBH15-DP			M4									
MBH15-E	70	90	M6	40	95	45	95	47.5	70	9	14	22
MBH15-EP			M5									

Model No	E1	P1	M	C	C1	M1	P2	F	Weight (Kgs)	Support unit		Suggest Coupling
										Fixed-side	Supported-side	
MBH15-D	50	-	M4	33	30	M3	61.5	5	-	FK 15	HF 15	SGS 34C SGS 40C
MBH15-DP									1.09			
MBH15-E	60	94.6	M4	34	36	M3	61.5	6	-	FK 15	HF 15H	SGS 45C SGS 50C
MBH15-EP									-			

New Product

Support Unit HF

Pattern : HF15H

Park No.	Part name	Qty
1	Housing	1
2	Bearing	1 set
3	Snap ring	1
4	Cushion Stopper (option)	1

HF

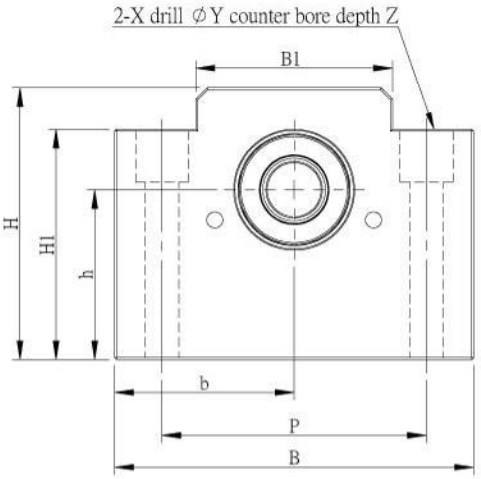

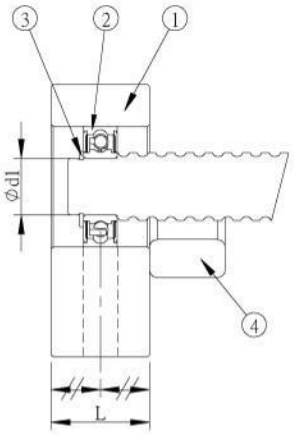

Unit : mm

Model No.	Shaft diameter d1	L	B	H	b ±0.02	h ±0.02	B1	H1	P	X	Y	Z	Bearing	Snap ring	Weight (Kgs)
HF15	15	20	70	50	35	30	41	40	60	6.6	12	10	6002ZZ	S 15	0.34
HF15H	15	26	95	72	47.5	45	52	61	70	9	14	14	6002ZZ	S 15	-

Motor Bracket MBCB12

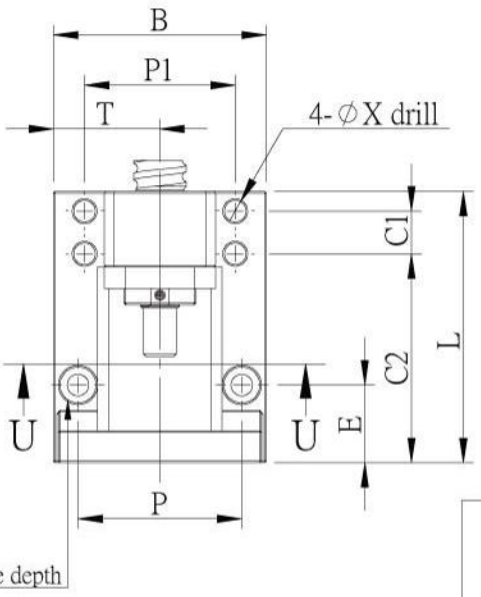

Surface treatment:
Black Oxide / Electroless Nickel Plating

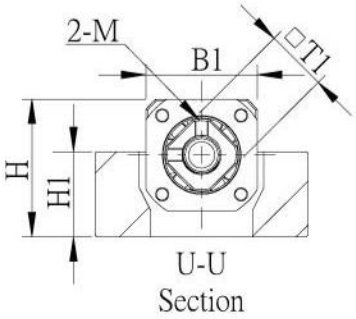

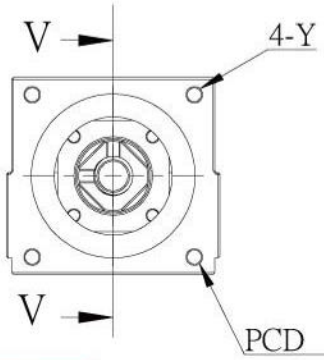

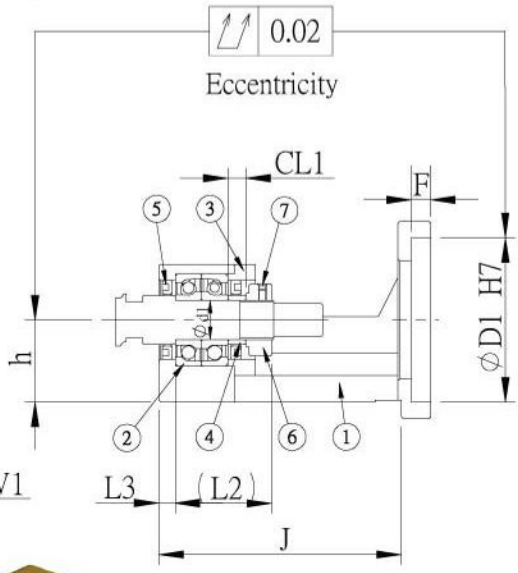

Park No.	Part name	Qty
1	Housing	1
2	7001A Bearing	1 set
3	Holding lid	1
4	Collar	2
5	Seal	2
6	Lock nut	1set

Unit : mm

Model No	D1	W1	Y	L	h ±0.02	B	P	T	Shaft diameter d1	CL1	L2	L3	H	H1	B1	P1
MBCB12-D	50	70	M5	83	25	65	50	32.5	12	5.5	29.5	5	42	26	34	46
MBCB12-DP			M4													

Model No	S	Q	E	X	C1	C2	F	J	M	T1	Weight (Kgs)	Support unit	Suggest Coupling
												Supported-side	
MBCB12-D	6.6	11	24	6.6	13	64	6	74	M4	19	0.79	BF12	SGS 34C
MBCB12-DP											0.79		

Note :
1.Bearings made preload , and axial clearance is 0 mm.)
2.Bearings use Taiwanese TPI brand P5 class as standard type . Japanese brand P5 class as option type.
Assembly by DF way suitable for ballscrew use.)

Without Change,directly update.

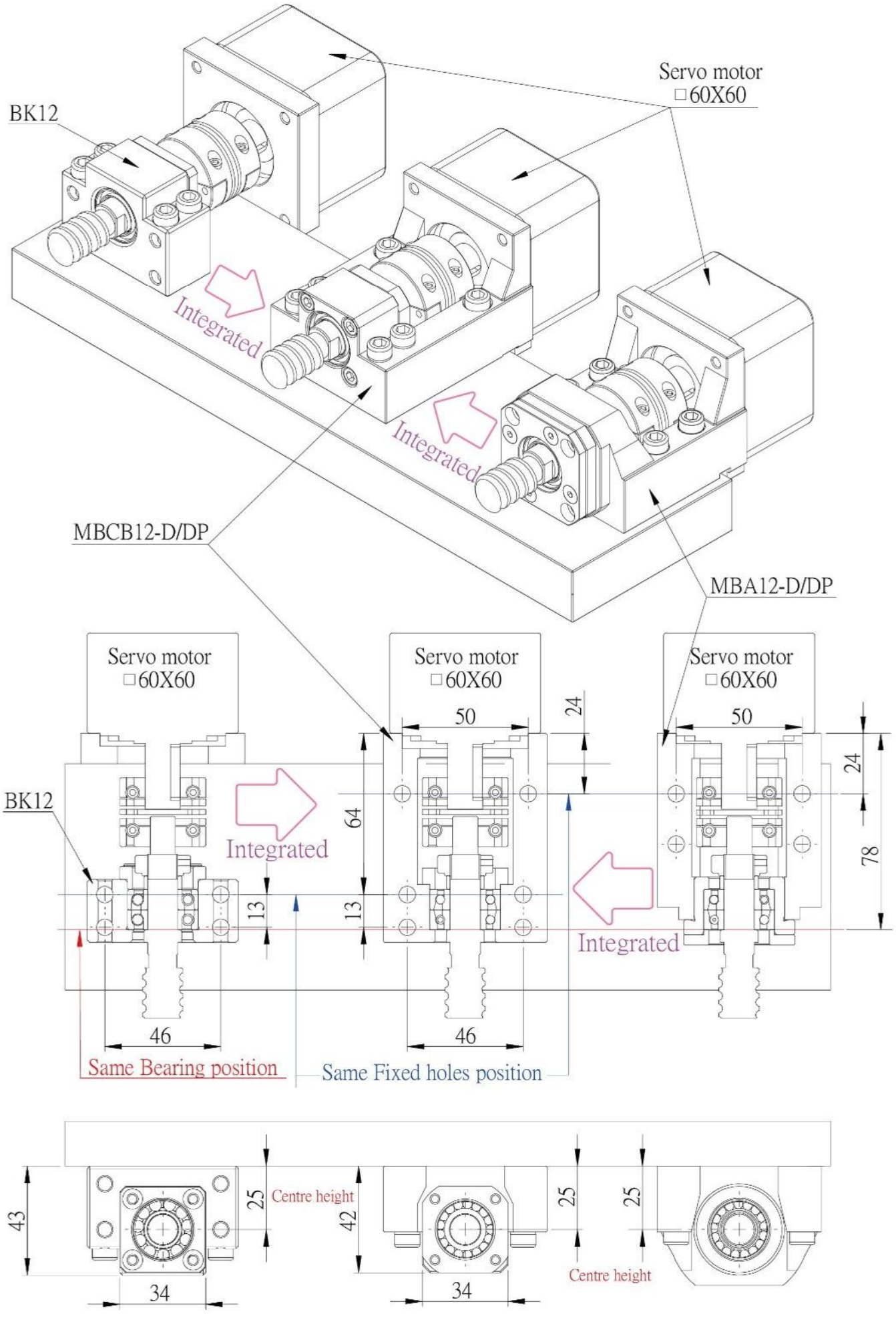

Motor Bracket MBCE12

Surface treatment:
Black Oxide / Electroless Nickel Plating

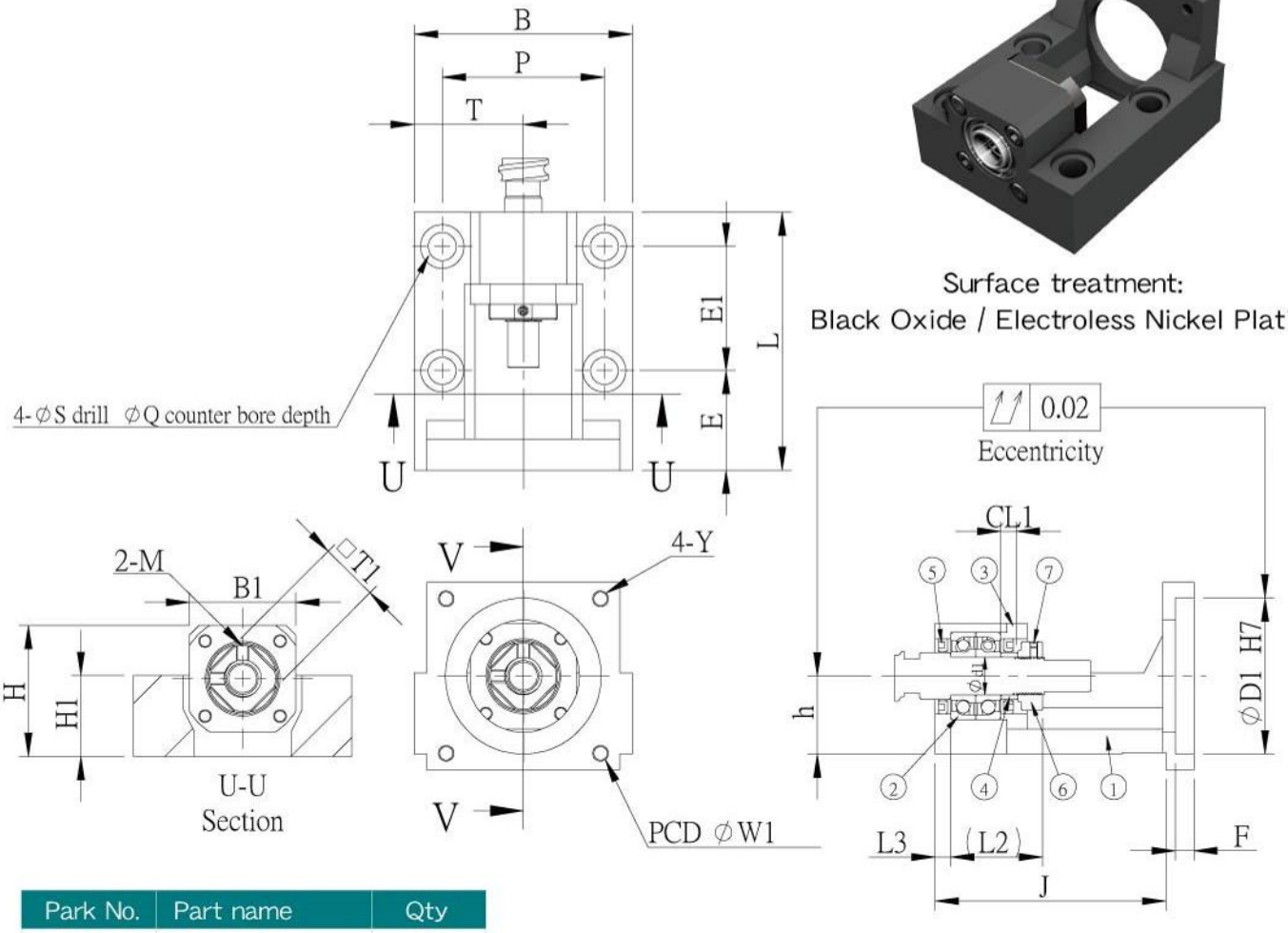

Park No.	Part name	Qty
1	Housing	1
2	7001A Bearing	1 set
3	Holding lid	1
4	Collar	2
5	Seal	2
6	Lock nut	1set

Unit : mm

Model No	D1	W1	Y	L	h ±0.02	B	P	T	Shaft diameter d1	CL1	L2	L3	H	H1	B1
MBCE12-D	50	70	M5	83	25	70	52	35	12	5.5	29.5	5	42	26	34
MBCE12-DP			M4												

Model No	S	Q	E	E1	F	J	M	T1	Weight (Kgs)	Support unit	Suggest Coupling
										Supported-side	
MBCE12-D	9	14	32	40	6	74	M4	19	0.84	EF12 AF 12	SGS 34C
MBCE12-DP									0.86		

Note :

1.Bearings made preload , and axial clearance is 0 mm.

2.Bearings use Taiwanese TPI brand P5 class as standard type . Japanese brand P5 class as option type.
Assembly by DF way suitable for ballscrew use.

Without Change,directly update.

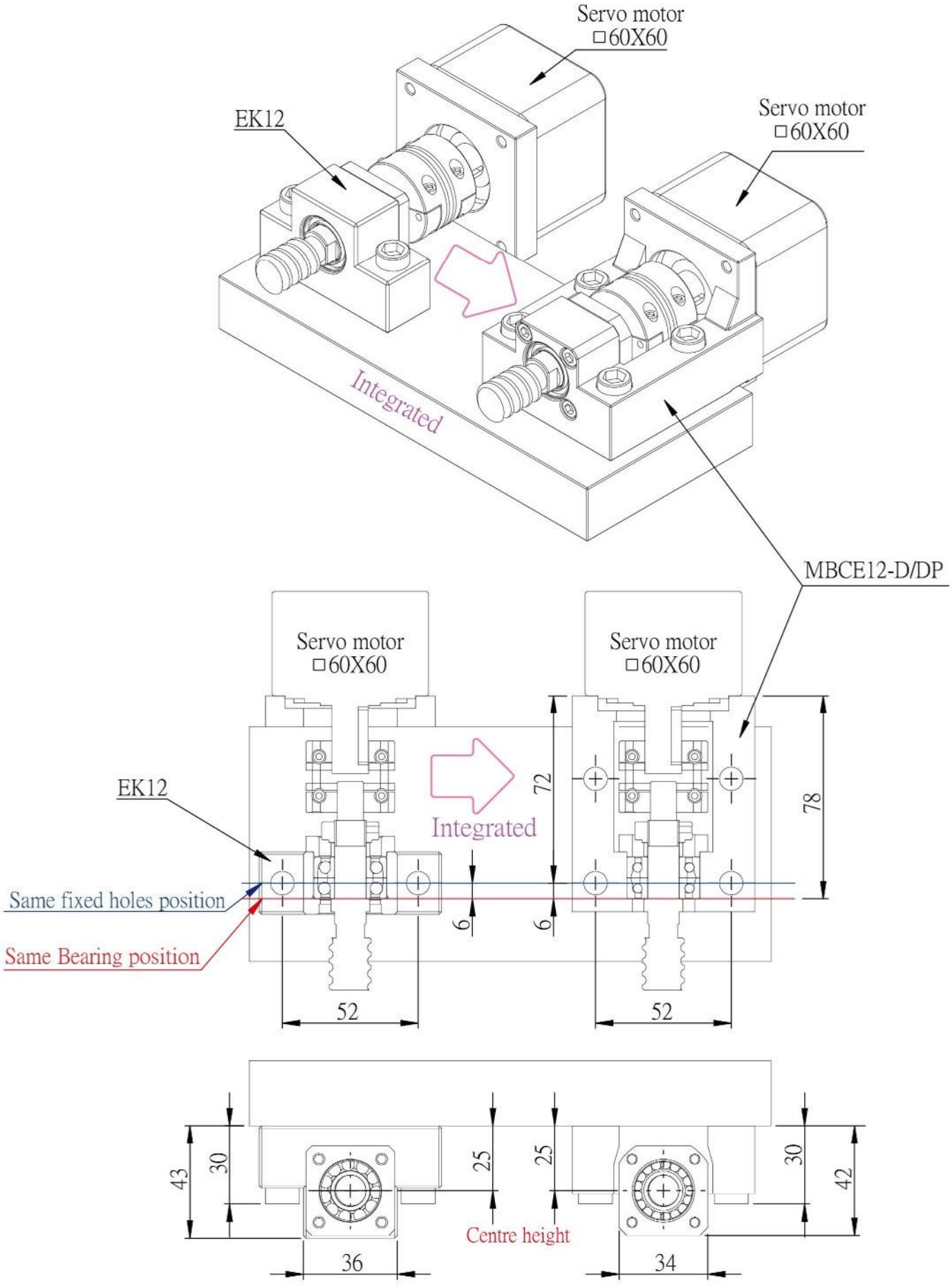

Motor Bracket MBCB15

Park No.	Part name	Qty
1	Housing	1
2	7002A Bearing	1 set
3	Holding lid	1
4	Collar thin thickness 10	1
	Collar thin thickness 6	2
5	Seal	2
6	Lock nut	1set

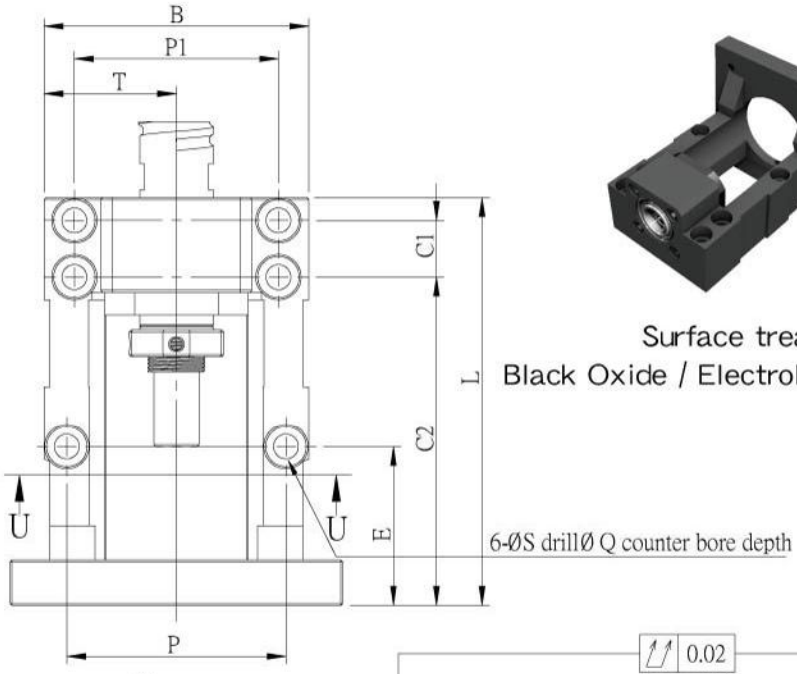

Surface treatment:
Black Oxide / Electroless Nickel Plating

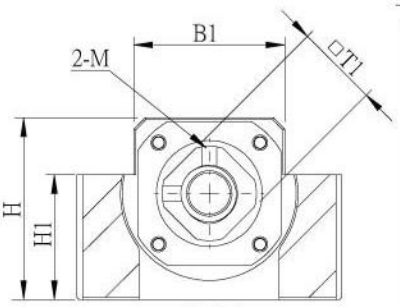

U-U
Section

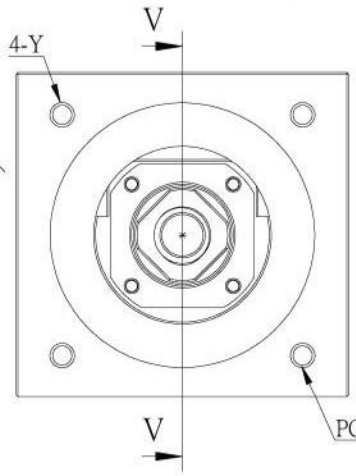

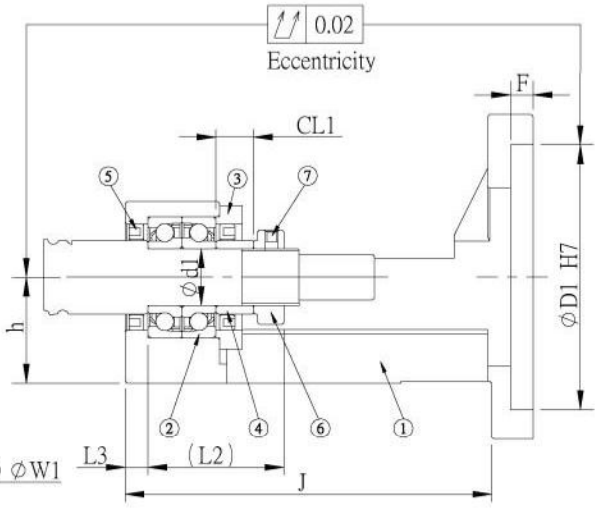

Unit : mm

Model No	D1	W1	Y	L	h ±0.02	B	P	T	Shaft diameter d1	CL1	L2	L3	H	H1	B1	P1
MBCB15-D	50	70	M5	98	28	70	58	35	15	10	36	6	48	33	40	54
MBCB15-DP			M4													
MBCB15-E	70	90	M6	108												
MBCB15-EP			M5													

Model No	S	Q	E	C1	C2	F	J	M	T1	Weight (Kgs)	Support unit	Suggest Coupling
											Supported-side	
MBCB15-D	6.6	11	32	15	77	6	89	M4	22	0.98	BF15	SGS 34C SGS 40C
MBCB15-DP										0.99		
MBCB15-E			42		87		97			1.39		SGS 40C SGS 45C
MBCB15-EP										1.45		

Note :

1.Bearings made preload , and axial clearance is 0 mm.

2.Bearings use Taiwanese TPI brand P5 class as standard type . Japanese brand P5 class as option type.
Assembly by DF way suitable for ballscrew use.

Without Change,directly update.

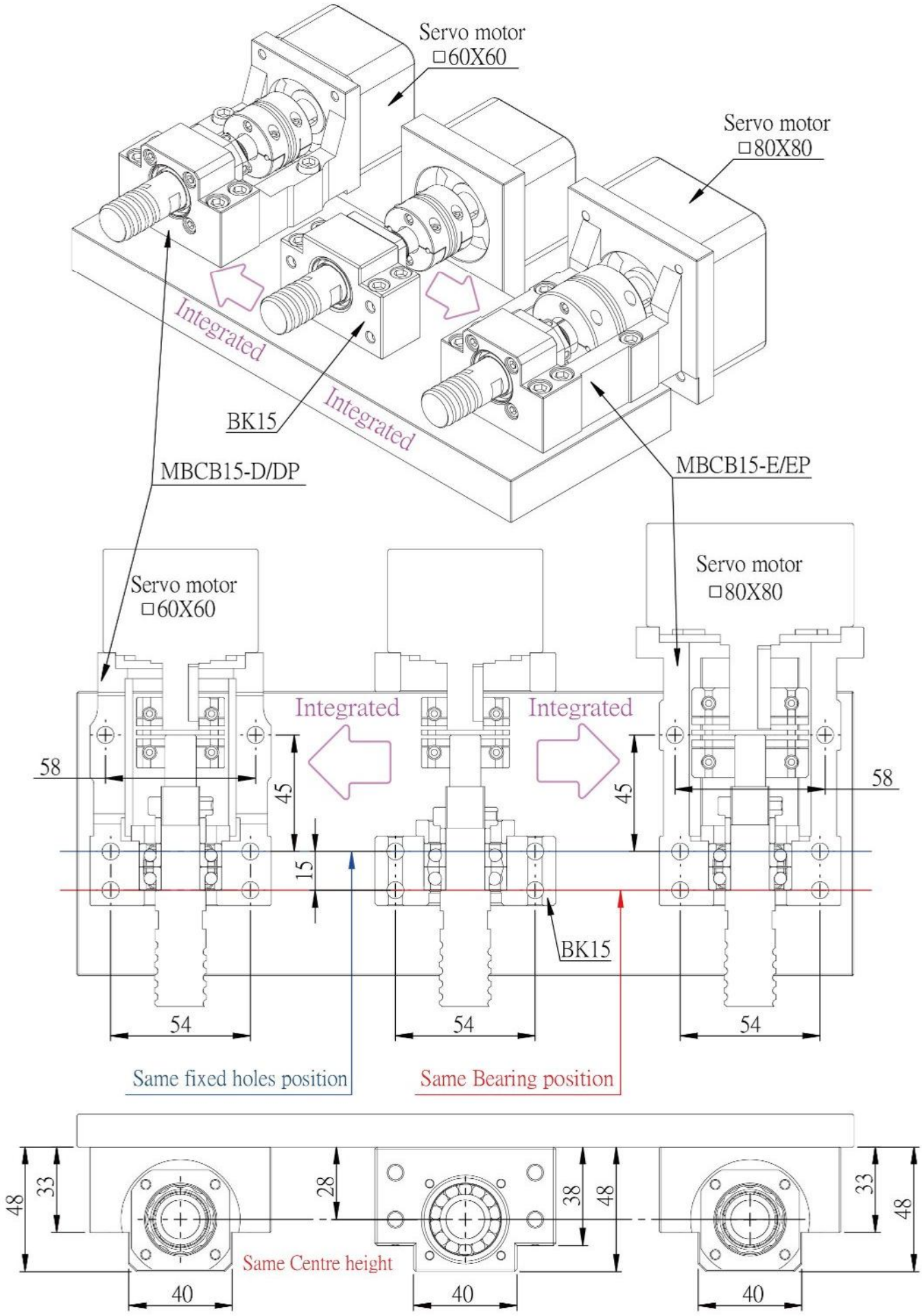

Motor Bracket MBCE(S)15 / MBCF(S)20

Fig→Fixed+Fixed

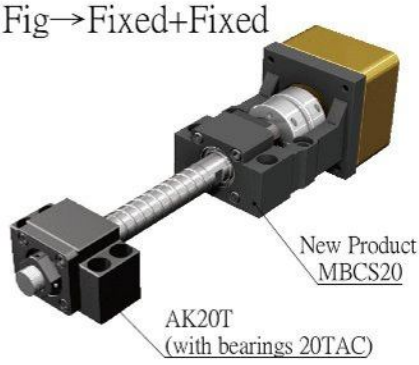

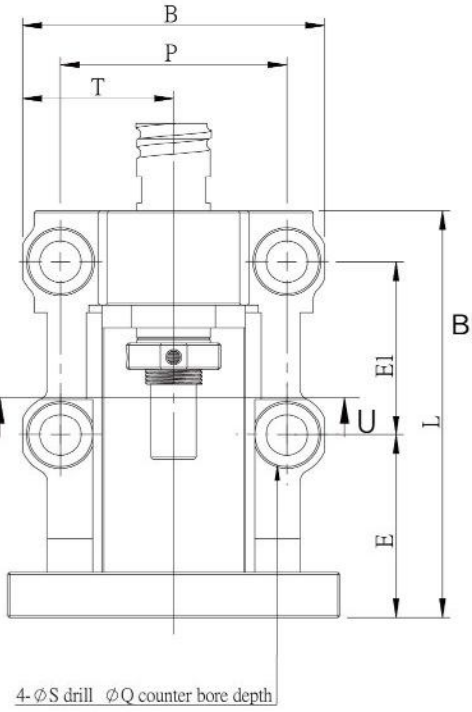

MBCE15-E

Surface treatment:
Black Oxide / Electroless Nickel Plating

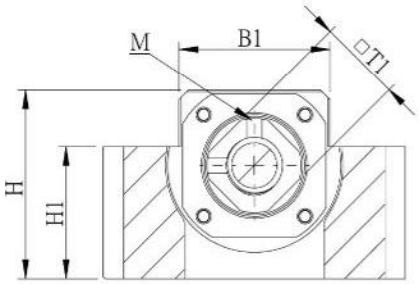

U-U

Fig→Fixed+Supported

Park No.	Part name	Qty
1	Housing	1
2	Bearing MBCE15 with bearings 7002A MBCS15with bearings15TAC MBCF20with bearings7204 MBCS20with bearings20TAC	1 set
3	Holding lid	1
4	Collar	2
5	Seal	2
6	Lock nut	1set

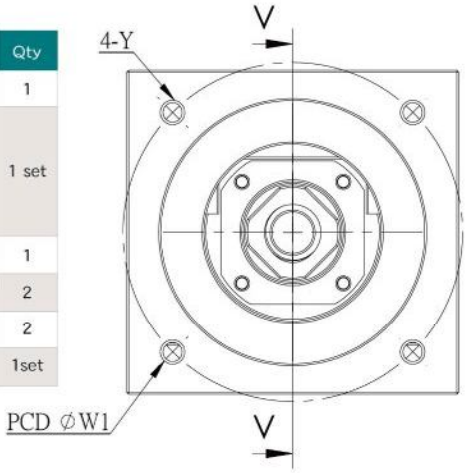

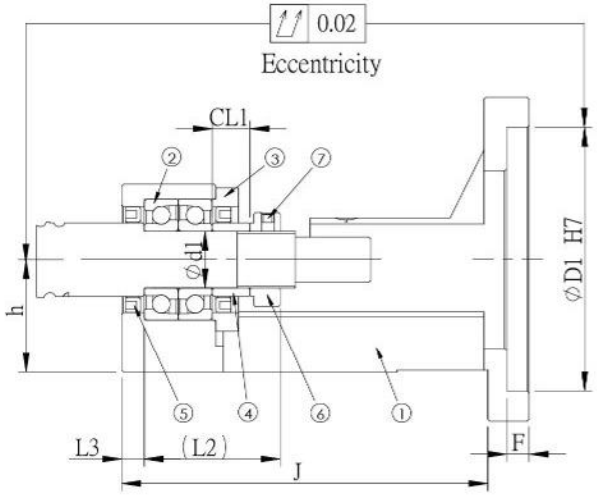

Unit : mm

Model No	D1	W1	Y	L	h ±0.02	B	P	T	Shaft diameter d1	CL1	L2	L3	H	H1	B1	S	Q	E	E1	F	J	M	T1	Weight (Kgs)	Support unit Supported-side	Suggest Coupling
MBCE15-D	50	70	M5	98	30	80	60	40	15	10	36	6	50	35	40	11	17	38.5	46	6	flat	M4	□22	1.09	EF 15 AF 15	SGS 34C SGS 40C
MBCE15-DP			M4																					1.07		
MBCE15-E	70	90	M6	108														48.5			97			1.52		SGS 40C SGS 45C
MBCE15-EP			M5																					1.52		
MBCS15-X	80	100	M6	140					15	9	47							70		8			□22	-	AF15	SGS 50C
MBCF20-X																								2.76		
MBCF20-Y	95	115	M8	141						11	50							71				M4	□30	2.71	EF 20 AF 20	SGS 50C SGS 57C
MBCF20-YP			M6													11	17							2.73		SGS 57C
MBCF20-S	110	130	M8	151	30	95	75	47.5	20			9	58	45	56			81	50	8	124			3.6		SGS 57C
MBCF20-G		145		153														83		10				3.77		
MBCS20-X	80	100	M6	140														70						-		SGS 50C
MBCS20-Y	95	115	M8	141						9	57							71		8		M4	ϕ40	2.81	AK20T AF20	SGS 50C SGS 57C
MBCS20-YP			M6																					2.85		SGS 57C
MBCS20-S	110	130	M8	151														81						3.69		SGS 57C
MBCS20-G		145		153														83		10				3.92		

Note :
1.Bearings made preload , and axial clearance is 0 mm.
2.Bearings use Taiwanese TPI brand P5 class as standard type . Japanese brand P5 class as option type.
Assembly by DF way suitable for ballscrew use.

Without Change,directly update.

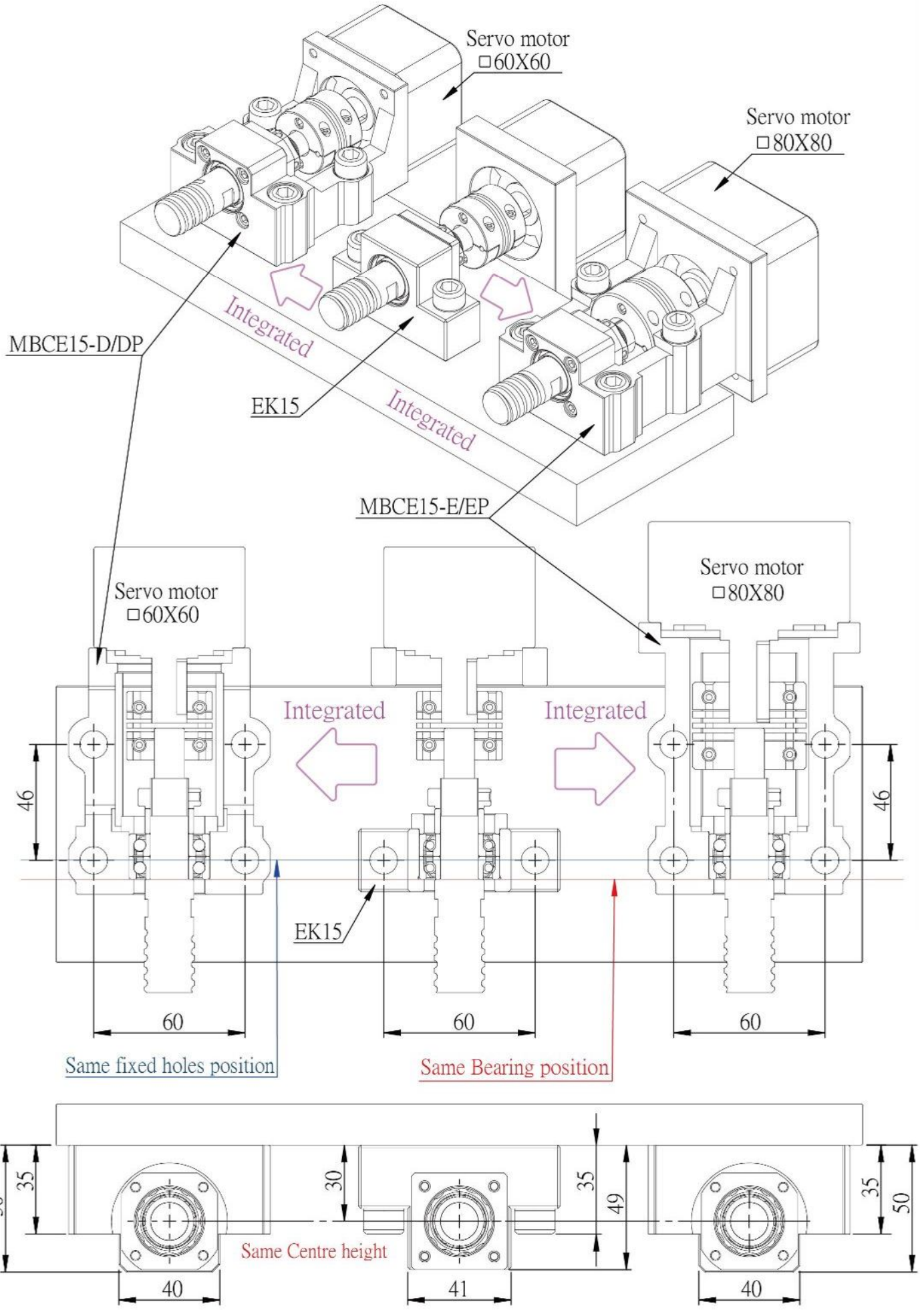

Illustration for MBC_20

Fixed+Fixed

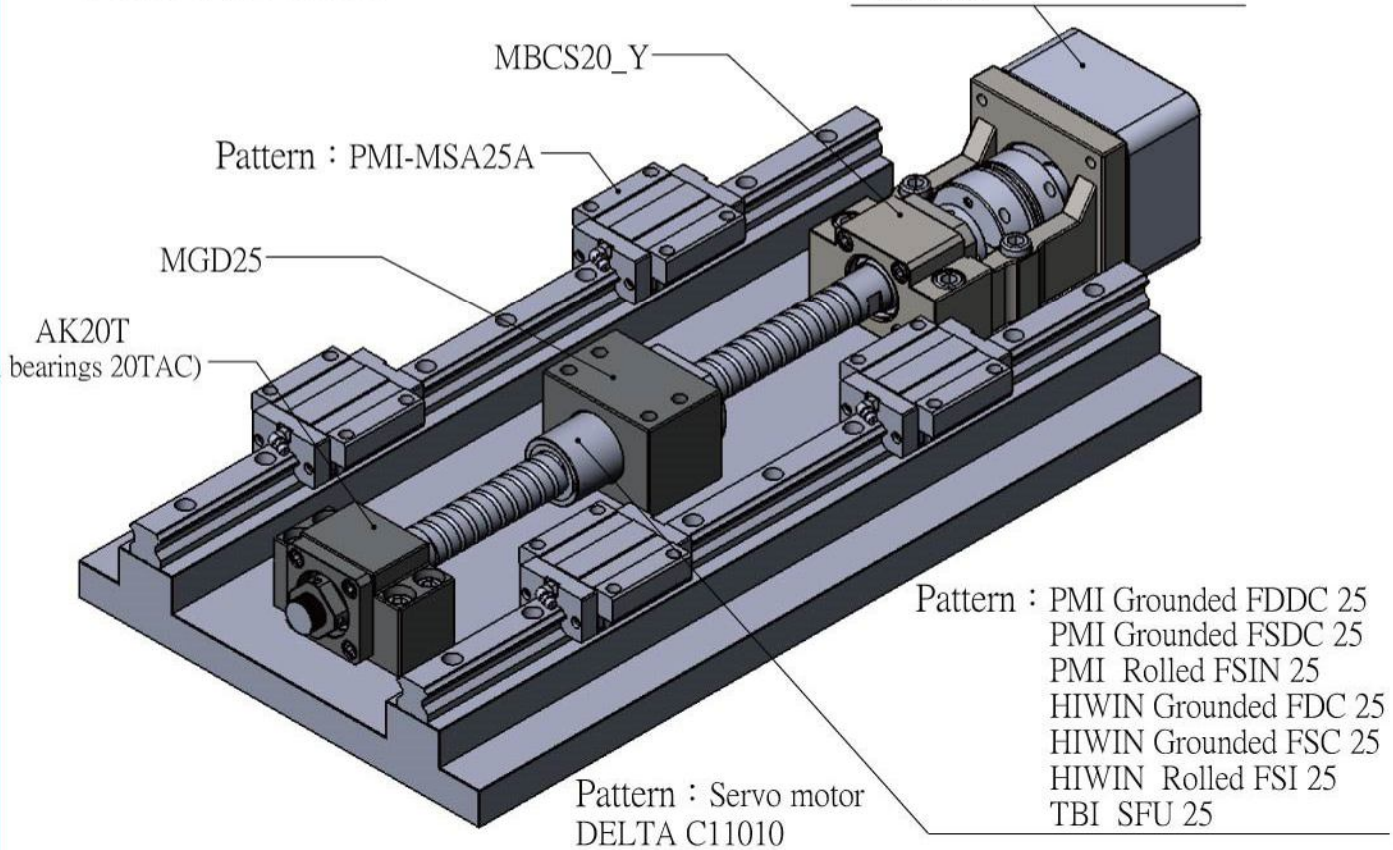

Fixed+Supported

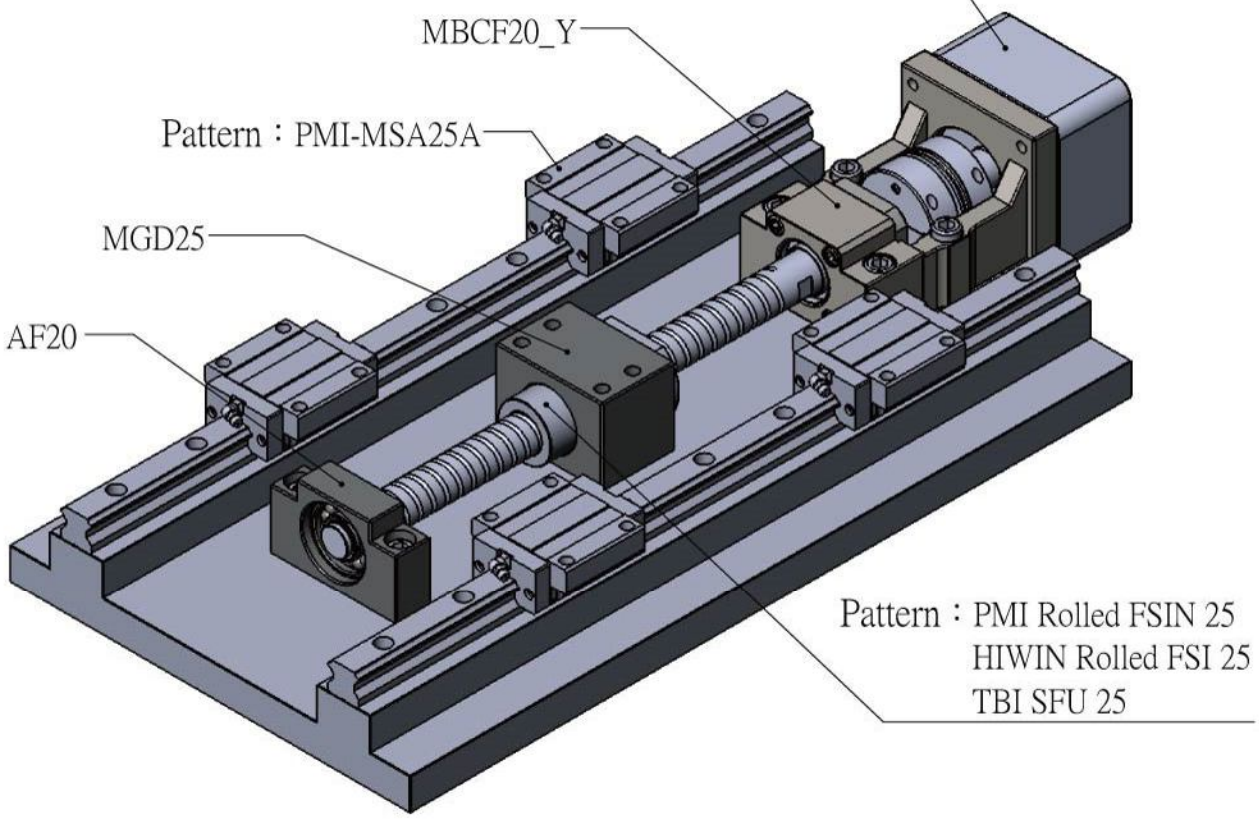

Illustration for MBC_20

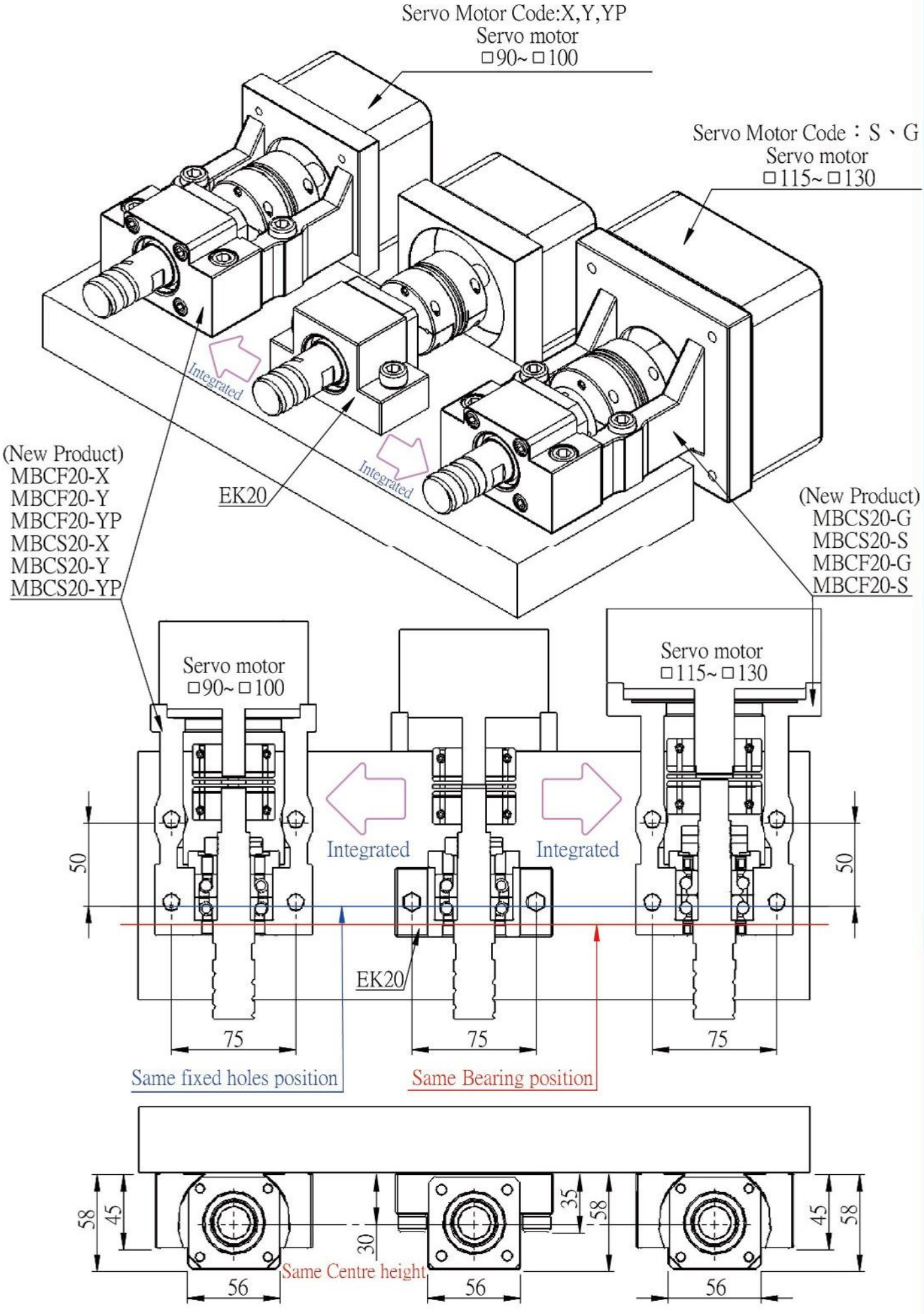

Motor Bracket MBC25

New Product

Fig→Fixed+Fixed

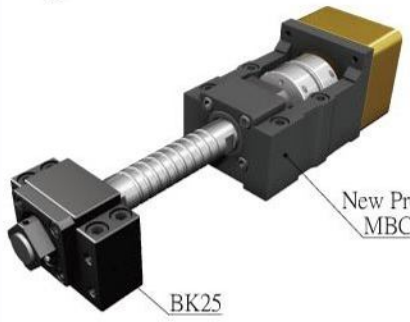

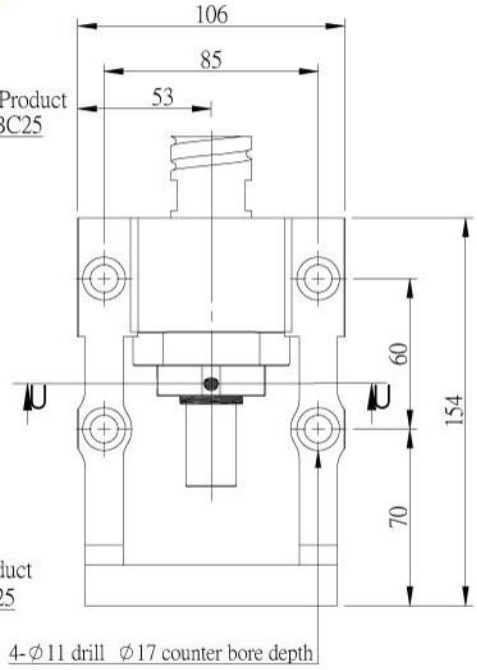

Surface treatment: Black Oxide

Fig→Fixed+Supported

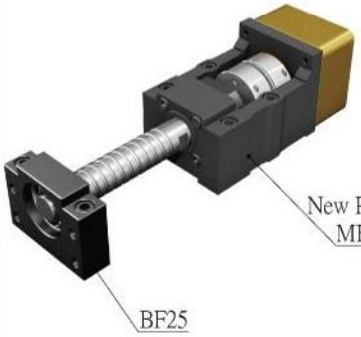

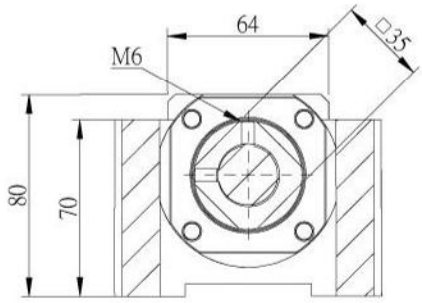

U-U

Park No.	Part name	Qty
1	Housing	1
2	Bearing Bearing 7205	1 set
3	Holding lid	1
4	Collar	2
5	Seal	2
6	Lock nut	1set

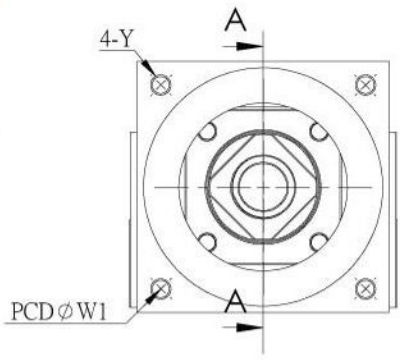

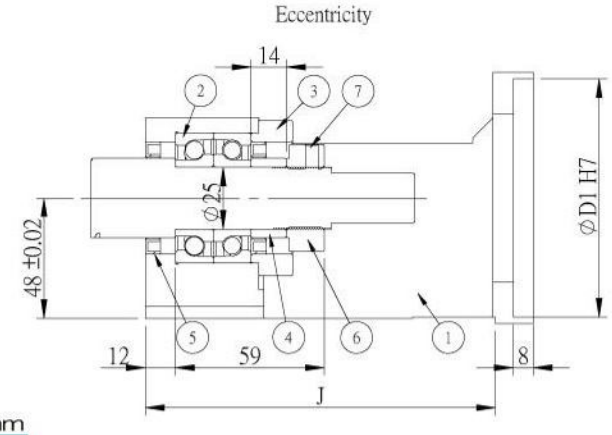

Unit : mm

Model No	D1	W1	Y	J	Weight (Kgs)	Support unit Supported-side	Suggest Coupling
MBC25-X	80	100	M6	平底	-	BK25 BF25	SGS 57C SGS 65C
MBC25-Y	95	115	M8	139			
MBC25-YP			M6				

Note :

1.Bearings made preload , and axial clearance is 0 mm.

2.Bearings use Taiwanese TPI brand P5 class as standard type . Japanese brand P5 class as option type. Assembly by DF way suitable for ballscrew use.

Illustration for MBC25

Fixed+Fixed

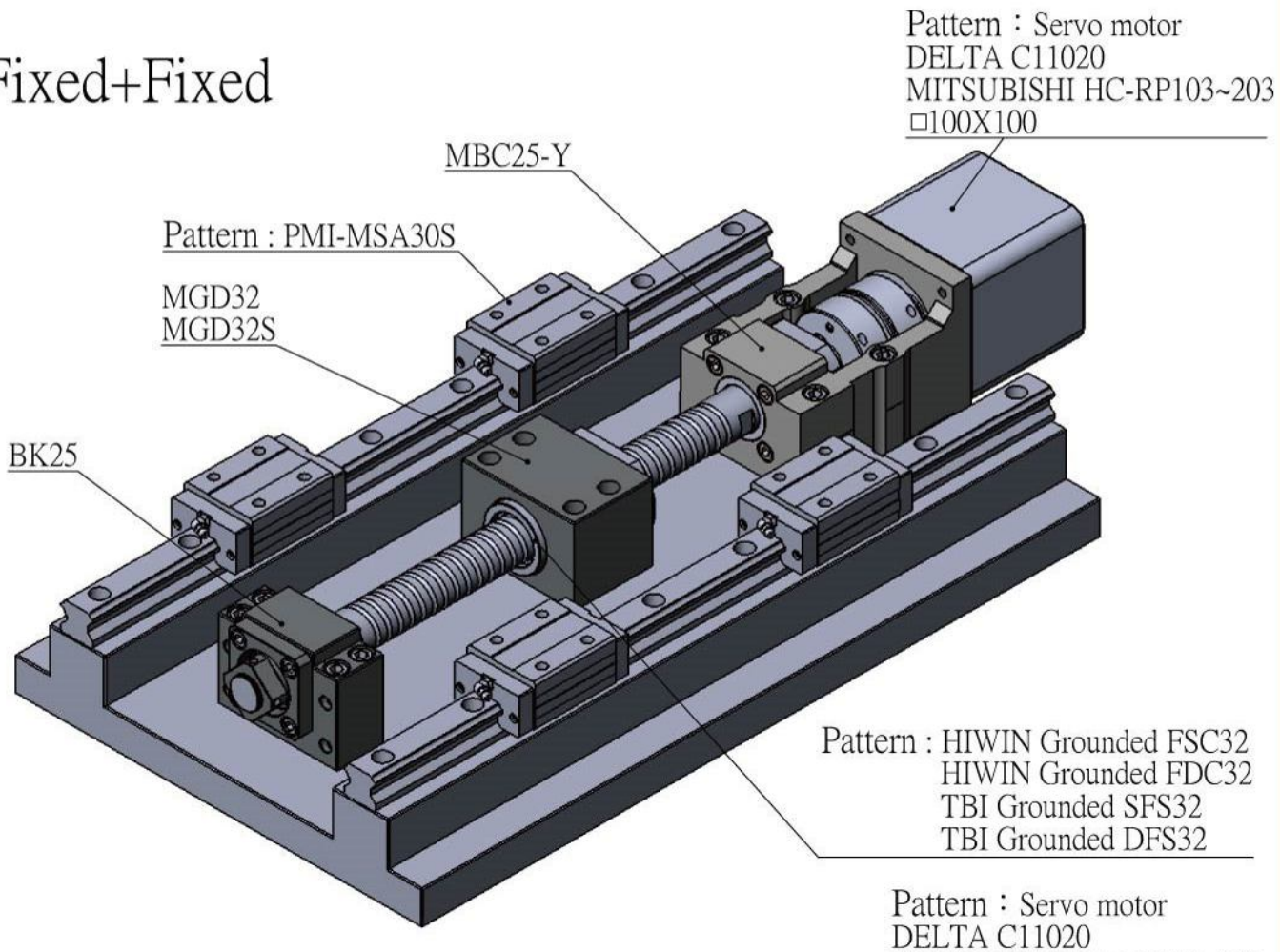

Fixed+Supported

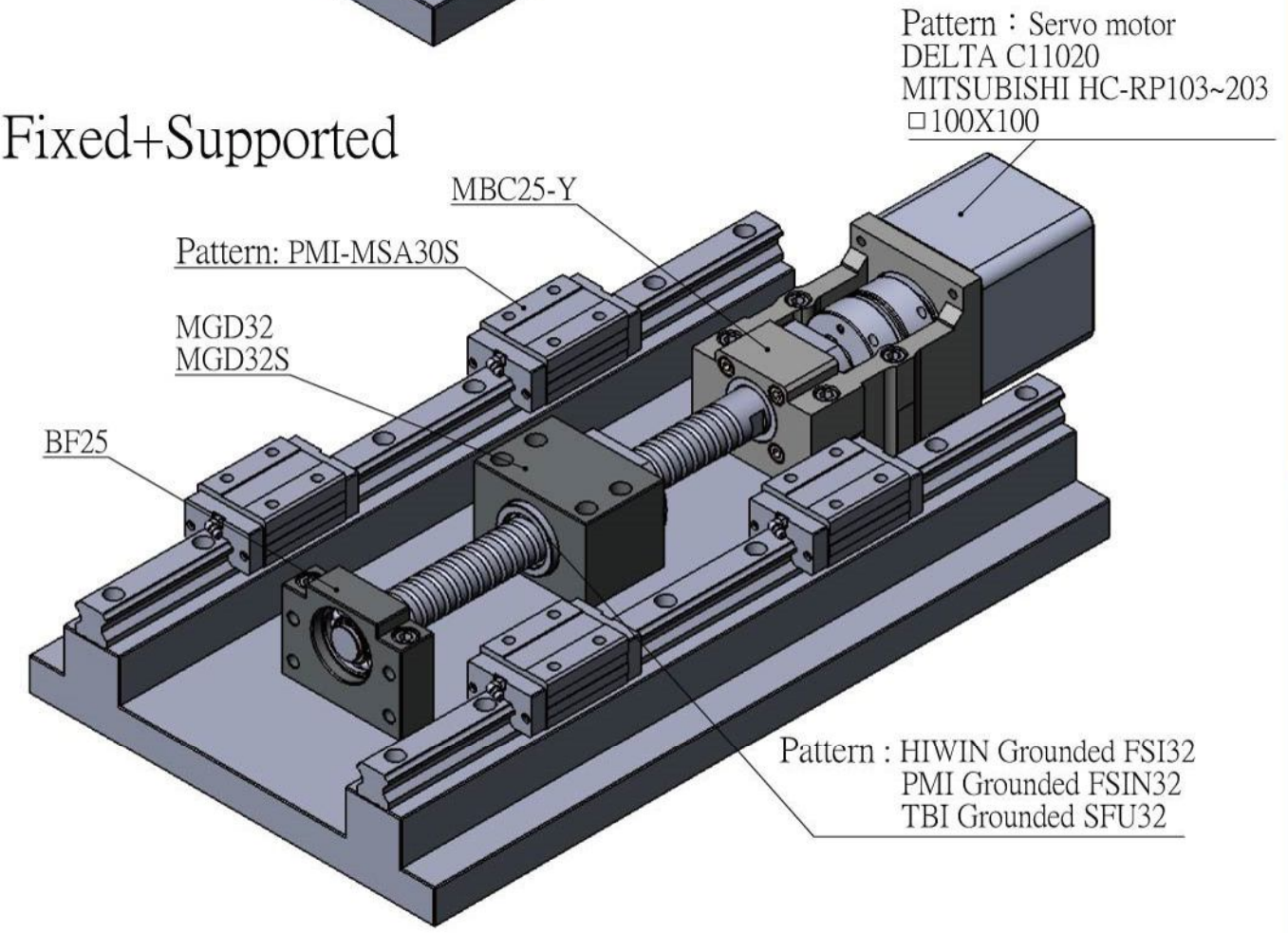

Motor Bracket MBA (Narrow Type)

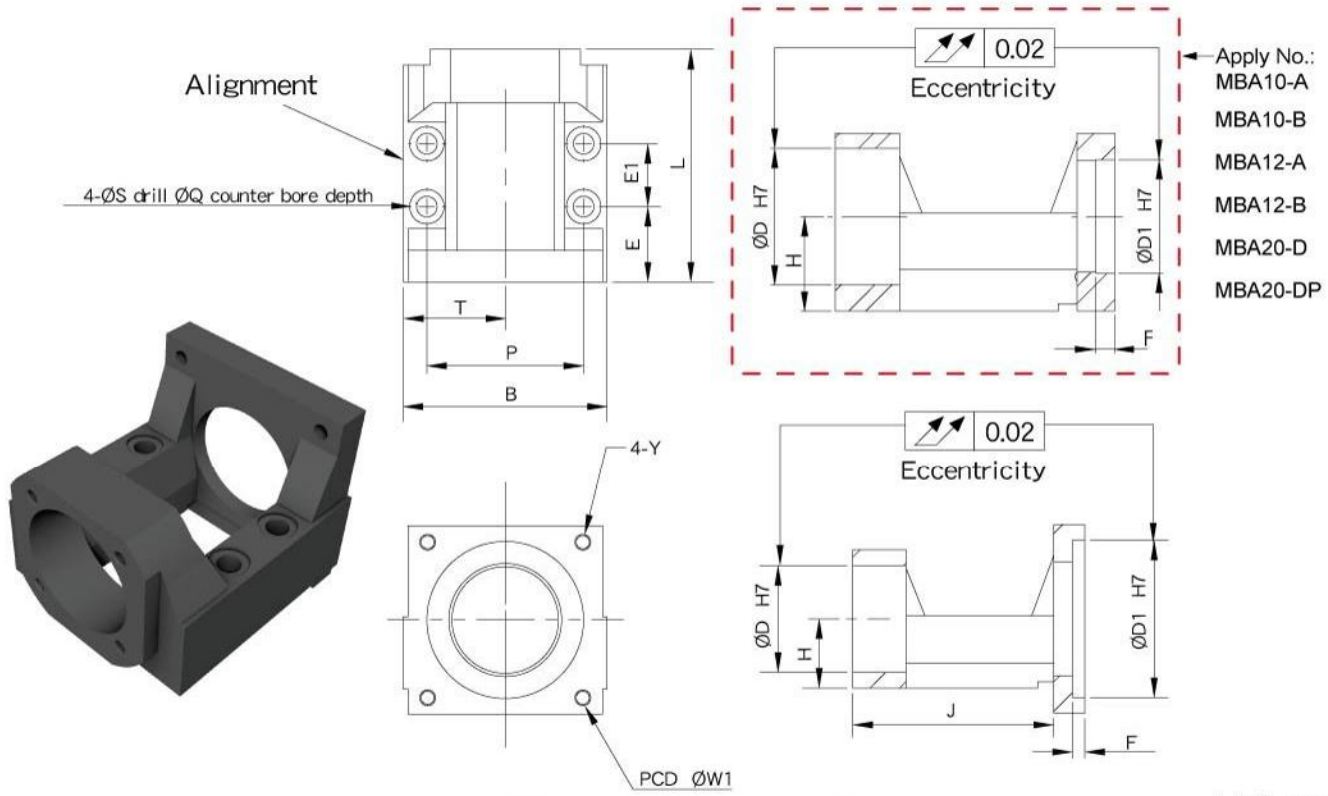

Unit : mm

Model No	Dimensions of Motor Bracket																Support unit		Suggest Coupling
	D1	W1	Y	D	L	H ±0.02	B	P	T	S	Q	E	E1	F	J	Weight (Kgs)	Fixed-side	Supported-side	
MBA6/8-A	30	45	M3	28	61	17	52	41	26	5.5	9.5	19	20	5	54	0.29	FKA06 FKA08	EF08	SGS 27C
MBA6/8-B		46	M4																
MBA10-A	30	45	M3	34	74	22	65	50	32.5	6.6	11	24	20	5	flat	0.62	FK10	BF10	SGL 27C
MBA10-B		46	M4																
MBA10-C	38.1	66.7													65	0.66			SGL 34C
MBA10-D	50	70	M5													0.62			SGS 34C
MBA10-DP			M4																
MBA12-A	30	45	M3	36	74	25	65	50	32.5	6.6	11	24	20	5	flat	0.67	FK12	BF12	SGL 27C
MBA12-B		46	M4																
MBA12-C	38.1	66.7													65	0.7			SGL 34C
MBA12-D	50	70	M5													0.66			SGS 34C
MBA12-DP			M4													0.68			
MBA15-C	38.1	66.7	M4	40	82	28	70	55	35	6.6	11	24	28	5	73	0.85	FK15	BF15	SGL 34C
MBA15-D	50	70	M5		84							25			74	0.86			SGS 34C
MBA15-DP			M4													0.85			
MBA15-F	73	98.4	M6		92		88	70	44	8.5	14	29		6	81	1.3			SGS 40C SGS 45C
MBA15-E	70	90			94							30			82	1.37			
MBA15-EP			M5		92							29			81	1.31			
MBA20-D	50	70	M5	57	113	34	88	70	44	8.5	14	29	42	5	flat	1.56	FKA20	BF20	SGL 45C
MBA20-DP			M4													1.54			
MBA20-F	73	98.4	M6											6	102	1.59			SGS 45C
MBA20-E	70	90														1.61			
MBA20-EP			M5													1.62			SGL 45C

Note :

1.Can choose B angle bearings when use support unit with FKA20

Motor Bracket MBL (Low Narrow Type)

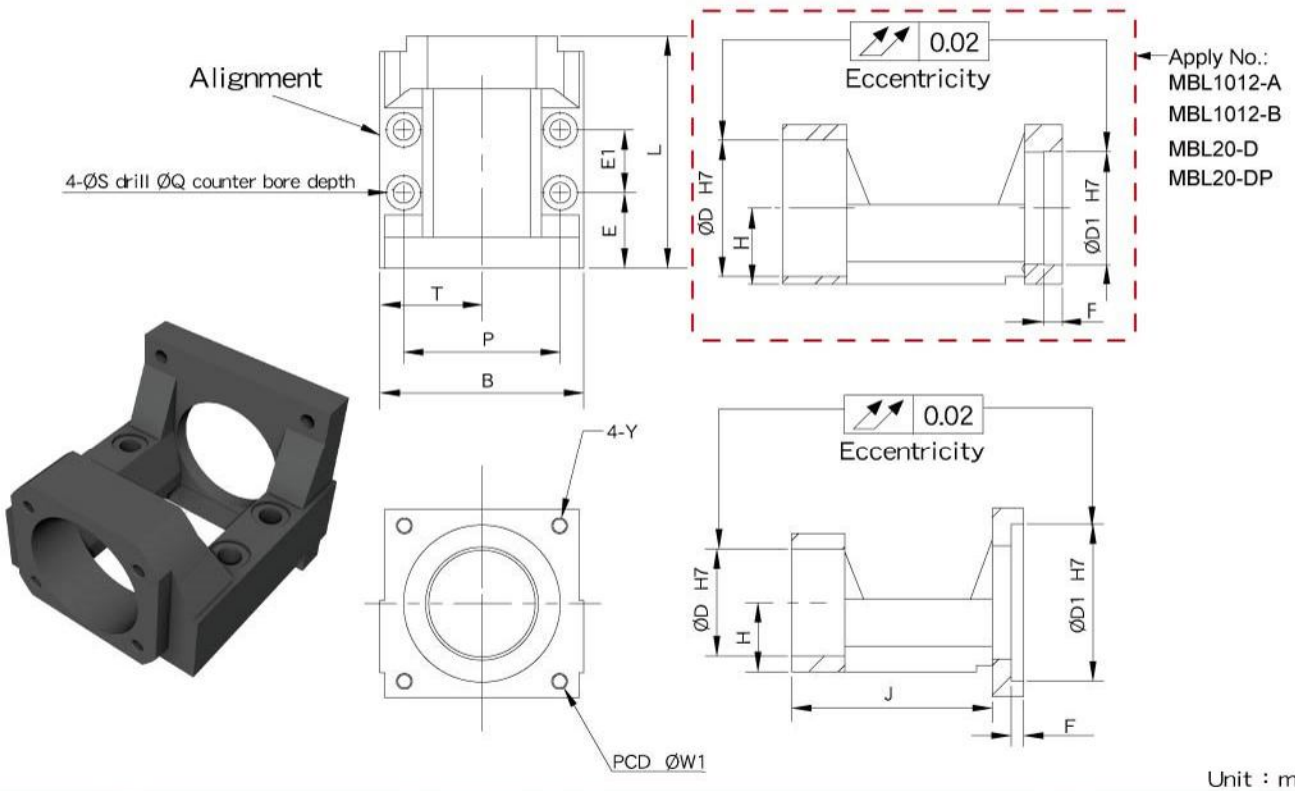

Unit : mm

Model No	Dimensions of Motor Bracket															Support unit		Suggest Coupling
	D1	W1	Y	D	L	H ±0.02	B	P	T	S	Q	E	E1	F	J	Weight (Kgs)	Fixed-side	Supported-side	
MBL6/8-A	30	45	M3	28	61	15.5	52	41	26	5.5	9.5	19	20	5	54	0.27	FKA06 FKA08	LF08 LFA12	SGS 27C
MBL6/8-B		46	M4																
MBL10/12-A	30	45	M3	36	74	20	65	50	32.5	6.6	11	24	20	5	flat	0.56	FKA10 FKA12	LF12 LFA15	SGL 27C
MBL10/12-B		46	M4													0.53			
MBL10/12-C	38.1	66.7													65	0.61			SGL 34C
MBL10/12-D	50	70	M5													0.57			SGS 34C
MBL10/12-DP			M4																
MBL15-C	38.1	66.7	M4	40	82	22	70	55	35	6.6	11	24	28	5	73	0.73	FKA15	LF15 LFA20	SGL 34C
MBL15-D	50	70	M5		84							25			74	0.74			SGS 34C
MBL15-DP			M4													0.75			
MBL15-F	73	98.4	M6		92		88	70	44	8.5	14	29		6	81	1.15			SGS 40C
MBL15-E	70	90			94							30			82	1.21			
MBL15-EP			M5		92							29			81	1.17			
MBL20-D	50	70	M5	57	113	30	88	70	44	8.5	14	29	42	5	flat	1.43	FKA20	AF20 EF20 LFA25	SGL 45C
MBL20-DP			M4													1.41			
MBL20-F	73	98.4	M6											6	102	1.44			SGS 45C
MBL20-E	70	90														1.47			
MBL20-EP			M5													1.48			SGL 45C

Note :

1.Can choose B angle bearings when use support unit with FKA20

Motor Bracket MBB (Hidden Type)

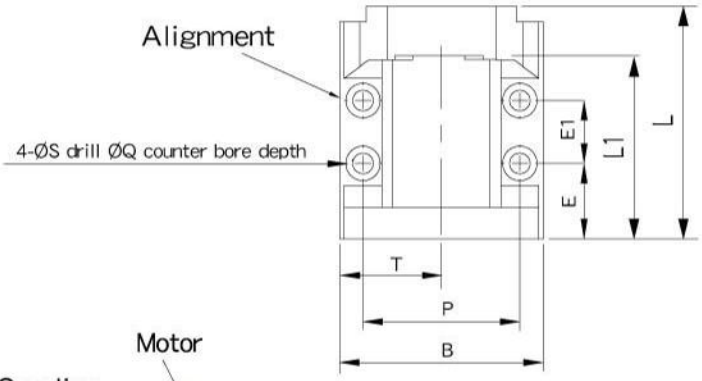

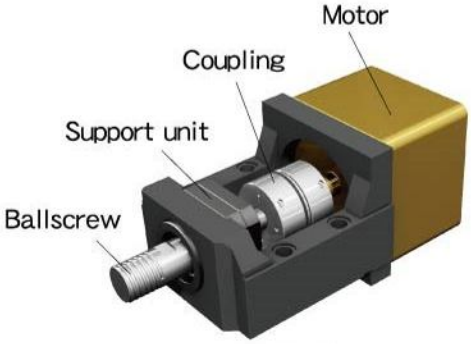

Assembly Way

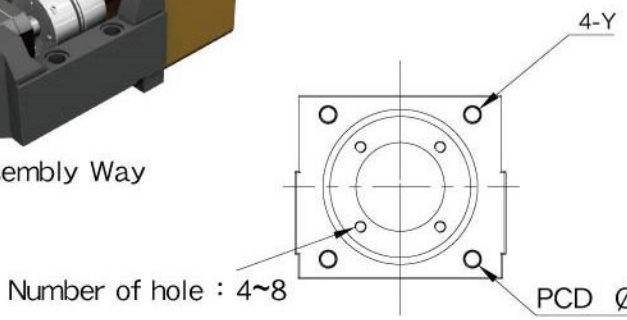

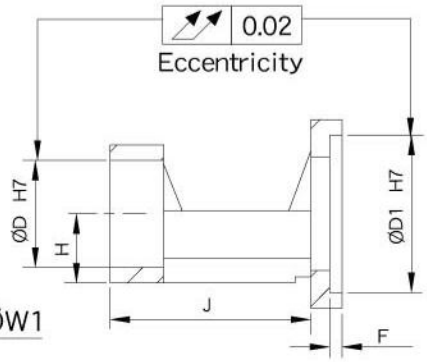

Unit : mm

Model No	Dimensions of Motor Bracket																Support unit		Suggest Coupling
	D1	W1	Y	D	L	L1	H ±0.02	B	P	T	S	Q	E	E1	F	J	Weight (Kgs)	Fixed-side	Supported-side	
MBB20L-G	110	145	M8	57	170	143	48	150	126	75	14	20	53	59	10	146	6.46	FK20B	BF20H	SGL 65C
MBB20-G				58														MBK15DF MBK17DF MBK20DF	BF15+20mm BF17+9mm BF20H	
MBB25L-S	110	130	M8	63	167	141	48	150	126	75	14	20	51	59	8	146	-	FK25	BF25	SGL 65C
MBB25L-G		145			170	143							53		10		6.23			SGL 65C SGS 65C
MBB25L-G-M													55	70		150	5.9			
MBB30-H	114.3	200	M12	85	230	189	51	200	170	100	18	26	75	75	20	191	14	WBK25DF WBK25DFD WBK30DF WBK30DFD	SF25 SBK25 BF30 SBK30	SAP-82C SAP-94C

Note :

1.Can choose B angle bearings when use support unit with FK20/FK25

Recommended shaft end shape(Fixed-side) for MBC types

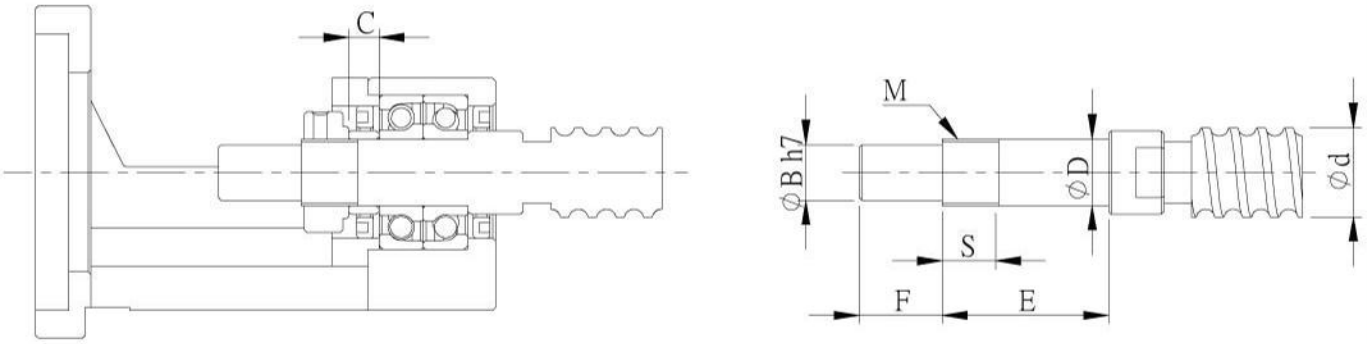

Ground Ballscrew

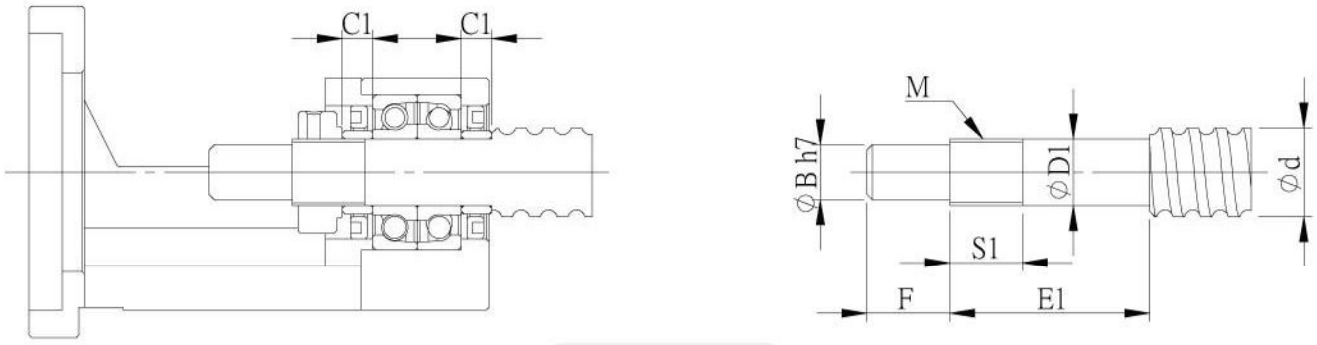

Rolled Ballscrew

Unit : mm

Support unit model No.	Ballscrew shaft OD	Shaft support portion OD							Metric screw thread			Length of Sleeve	
MBC型 Type MBC	d	D	D1	B	E	E1	F	F1	M	S	S1	C	C1
MBCB12	14/15/16	12	-0.006 -0.017	10	30	36	15		M12X1	10	12	5.5	5.5
MBCE12													
MBCB15	18/20	15	-0.006 -0.017	12	40	40	20		M15X1	15	12	10	6
MBCE15 MBCS15						48							10
MBCF20	25/28	20	-0.006 -0.017	17	53	64	27		M20X1	16	16	11	
MBCS20					60	69	25			23	23	9	
MBC25	30/32/36	25	-0.006 -0.017	20	62	76	33	30	M25X1.5	20		14	

Motor Bracket MB and Corresponding motor reference table

Motor Bracket	Servo Motor Brand Specification		
	Manufacturer	Model No	Flange Width
MB*-A	Panasonic	MSMA3A MSMA5A MSMA01	38
	HIWIN	FRLS50W/100W	
MB*-B	Yaskawa electric	SGMAH-A3 SGMAH-A5	40
	Mitsubishi electric	HF-KP053 / 13 HF-MP053 /13	
	OMRON	R88M-W03030 R88M-W05030 R88M-W10030	
	SANYO	P30B04003 P30B04005 P30B04010	
MB*-C	Yaskawa electric	02SGMAH-21 04SGMAH-21	60
MB*-D	Yaskawa electric	SGMAH-02 / 04A SGMAH-03D	60
	Mitsubishi electric	HF-KP23 / 43 HF-MP23 /43	
	OMRON	R88M-W20030 R88M-W40030	
	SANYO	P30B06020 P30B06040	
	DELTA	C10602 C10604	
	HIWIN	FRLS200W FRLS400W	
MB*-DP	Panasonic	MSMA021 MSMA041	60
MB*-E	Yaskawa electric	SGMAH-08A	80
	Mitsubishi electric	HF-KP73 HF-MP73	
	SANYO	P30B08075	
	DELTA	C10807	
	HIWIN	FRMS750W	
MB*-EP	Panasonic	MSMA082	80
MB*-Y	DELTA	C11010 C11020	100
	Mitsubishi electric	HC-RP103 /153 HC-RP203	

Motor Bracket	Servo Motor Brand Specification		
	Manufacturer	Model No	Flange Width
MB*-F	Yaskawa electric	SGMAH-N21	85
MB*-G	Yaskawa electric	SGMGH-05 SGMGH-09 SGMGH-13	120~130
	Mitsubishi electric	HF-SP51~81 HF-SP52~152 HF-SP524~1524 HC-LP52~152	
	DELTA	E11305、G11303 E11310、G11306 E11315、G11309 E11320	
	Panasonic	MDMA102 MDMA152 MDMA202 MDMA252 MDMA302	130
	FANUC	B8、B12	
	HIWIN	FRMM1KW	
MB*-H	Yaskawa electric	SGMGH-20 SGMGH-30 SGMGH-44	180
	DELTA	E11820 E11830 F11830	
	Mitsubishi electric	HF-SP121~421 HF-SP202~702 HF-SP2024 HF-SP3524 HF-SP5024 HF-SP7024 HC-LP202 HC-LP302	176
	Panasonic	MDMA452 MDMA502	
MB*-S	SIEMENS	1FK7060 1FT6062	126 116
MB*-X	FANUC	β 2/4000is β 4/4000is	90
	SIEMENS	1FT6044 1FK7042-5	96
MB*-YP	Yaskawa electric	SGMSH-10 SGMSH-15 SGMSH-20	100

Note：

1.For others brand servo motor，please check off dimensions W1、D1、Y It can be applied as match，Please be attention for length of shaft。

2.Specifications are subject to change without prior notice if required to improve perfomance。

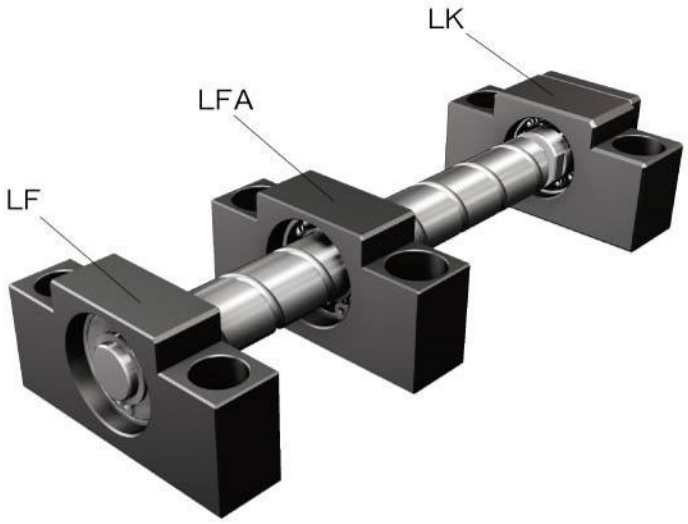

Low profile Support Unit LK
(fixed-side rectangular type)

Park No.	Part name	Qty
1	Housing	1
2	Bearing	1set
3	Holding lid	1
4	Collar	2
5	Seal	2
6	Lock nut	1set

LK

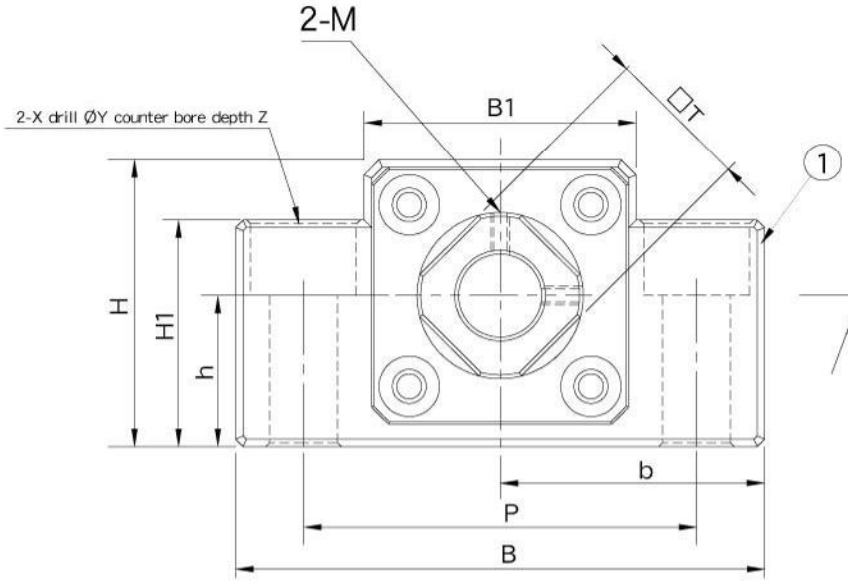

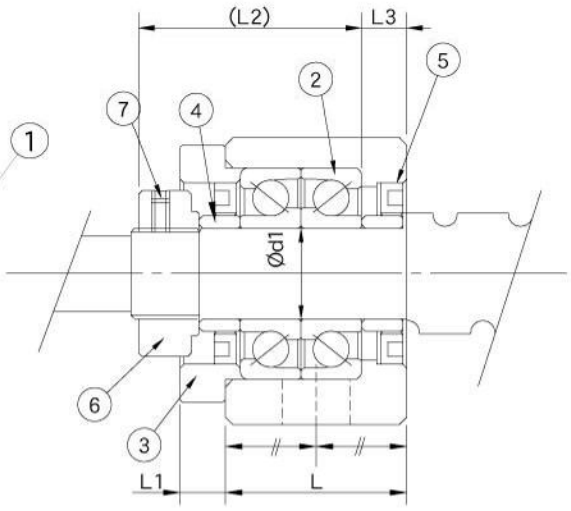

Unit : mm

Model No.	Shaft diameter d1	L	L1	L2	L3	B	H	b ±0.02	h ±0.02	B1	H1	P	X	Y	Z	M	T	Weight (Kgs)
LK08	8	22.5	-	26	3.5	62	31	31	15.5	30	25.5	46	9	14	12.5	M3	14	0.28
LK10	10	24	6	29.5	6	70	38	35	20	36	30	52	9	14	10	M3	16	0.44
LK12	12	24	6	29.5	6	70	38	35	20	36	30	52	9	14	10	M4	19	0.42
LK15	15	25	6	36	5	80	41	40	22	41	32	60	11	17	13	M4	22	0.51

Low profile Support Unit LK (fixed-side rectangular type)

Order Coding	Model No.	Surface treatment	Applicable ballscrew accuracy grade	Bearing		Delivery date
				Model No.	Max.Starting torque (gf-cm)	
LK08	LK08	Black Oxide	C3~C10	708A P5	90	EX-STOCK
LK08_C5			C5	708A P0	90	EX-STOCK
LK08_C3			C3	708A P5	90	1 day
LK08_N		Electroless Nickel Plating	C3~C10	708A P5	90	1 day
LK08_C5N			C5	708A P0	90	1 day
LK08_C3N			C3	708A P5	90	1 day
LK10	LK10	Black Oxide	C3~C10	7000A P5	190	EX-STOCK
LK10_C5			C5	7000A P0	190	EX-STOCK
LK10_C3			C3	7000A P5	190	1 day
LK10_N		Electroless Nickel Plating	C3~C10	7000A P5	190	1 day
LK10_C5N			C5	7000A P0	190	1 day
LK10_C3N			C3	7000A P5	190	2 days
LK12	LK12	Black Oxide	C3~C10	7001A P5	210	EX-STOCK
LK12_C5			C5	7001A P0	210	EX-STOCK
LK12_C3			C3	7001A P5	210	1 day
LK12_N		Electroless Nickel Plating	C3~C10	7001A P5	210	1 day
LK12_C5N			C5	7001A P0	210	1 day
LK12_C3N			C3	7001A P5	210	2 days
LK15	LK15	Black Oxide	C3~C5	7002A P5	230	EX-STOCK
LK15_C5			C5	7002A P0	230	EX-STOCK
LK15_C3			C3	7002A P5	230	1 day
LK15_N		Electroless Nickel Plating	C3~C10	7002A P5	230	1 day
LK15_C5N			C5	7002A P0	230	1 day
LK15_C3N			C3	7002A P5	230	2 days

Black Oxide
(Application : General case)

Electroless Nickel Plating
(Application : Clean room)

Note :
1.All types make Preload.)
2.All of bearings use Japanese & Taiwanese brand bearings(Model No. in blue), Assembly by DF way. The most suitable way for ballscrew use.)

Low profile Support Unit LF/LFA
(Supported-side rectangular type)

Order Coding	Model No.	Surface treatment	Applicable ballscrew accuracy grade	Bearing	Delivery date
LF08_C7	LF08	Black Oxide	C7	606ZZ	1 day
LF08_C3			C3 C5	606ZZ	EX-STOCK
LF08_C7N		Electroless Nickel Plating	C7	606VV	1 day
LF08_C3N			C3 C5	606VV	1 day
LF12_C7	LF12	Black Oxide	C7	6000ZZ	1 day
LF12_C3			C3 C5	6000ZZ	EX-STOCK
LF12_C7N		Electroless Nickel Plating	C7	6000DDU	1 day
LF12_C3N			C3 C5	6000DDU	1 day
LF15_C7	LF15	Black Oxide	C7	6002ZZ	1 day
LF15_C3			C3 C5	6002ZZ	EX-STOCK
LF15_C7N		Electroless Nickel Plating	C7	6002DDU	1 day
LF15_C3N			C3 C5	6002DDU	1 day
LFA12_C7	LFA12	Black Oxide	C7	6801ZZ	1 day
LFA12_C3			C3 C5	6801ZZ	EX-STOCK
LFA12_C7N		Electroless Nickel Plating	C7	6801ZZ	1 day
LFA12_C3N			C3 C5	6801ZZ	1 day
LFA15_C7	LFA15	Black Oxide	C7	6902ZZ	1 day
LFA15_C3			C3 C5	6902ZZ	EX-STOCK
LFA15_C7N		Electroless Nickel Plating	C7	6902ZZ	1 day
LFA15_C3N			C3 C5	6902ZZ	1 day
LFA20_C7	LFA20	Black Oxide	C7	6804ZZ	1 day
LFA20_C3			C3 C5	6804ZZ	EX-STOCK
LFA20_C7N		Electroless Nickel Plating	C7	6804ZZ	1 day
LFA20_C3N			C3 C5	6804ZZ	1 day
LFA25_C7	LFA25	Black Oxide	C7	6005ZZ	1 day
LFA25_C3			C3 C5	6005ZZ	EX-STOCK
LFA25_C7N		Electroless Nickel Plating	C7	6005ZZ	1 day
LFA25_C3N			C3 C5	6005ZZ	1 day

Black Oxide (Application : General case)

Electroless Nickel Plating
(Application : Clean room)

Note:
1.All of bearings use Japanese & Taiwanese brand bearings.

Low profile Support Unit LF
(supported-side rectangular type)

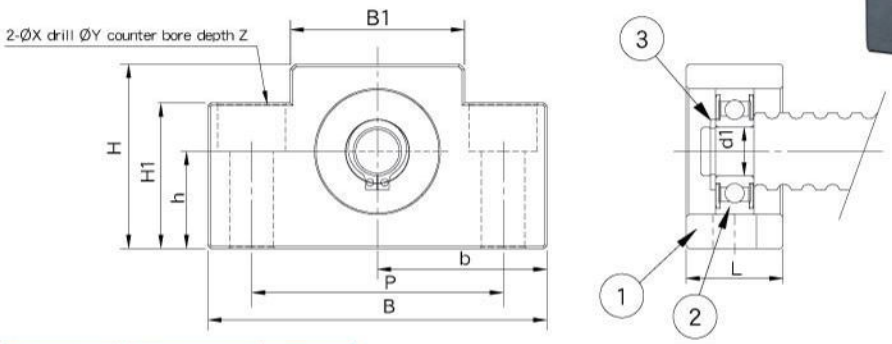

Park No.	Part name	Qty
1	Housing	1
2	Bearing	1 set
3	Snap ring	1

Unit : mm

Model No.	Shaft diameter d1	L	B	H	b ±0.02	h ±0.02	B1	H1	P	X	Y	Z	Bearing	Snap ring	Weight (Kgs)
LF08	6	16	62	31	31	15.5	30	25.5	46	9	14	12.5	606ZZ	S 06	0.19
LF12	10	20	70	38	35	20	36	30	52	9	14	10	6000ZZ	S 10	0.3
LF15	15	20	80	41	40	22	41	32	60	9	14	11	6002ZZ	S 15	0.35

LFA

Low profile Support Unit LFA
(supported-side rectangular type)

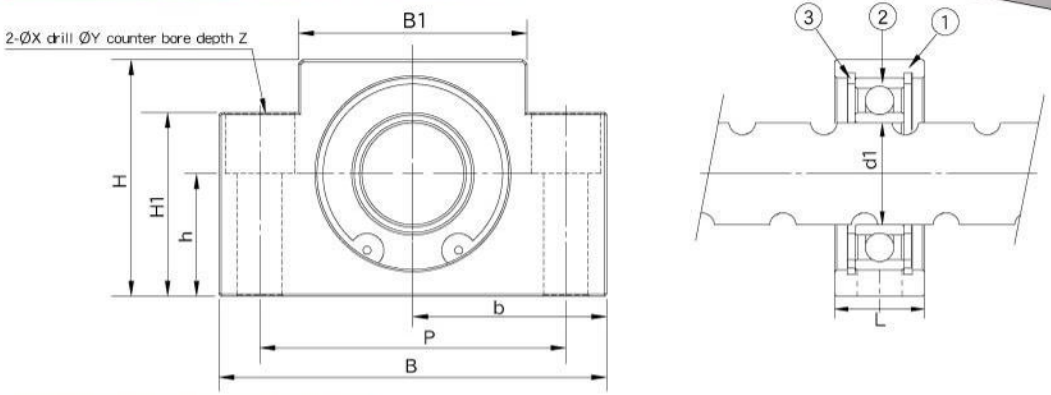

Park No.	Part name	Qty
1	Housing	1
2	Bearing	1 set
3	Snap ring	2

Unit : mm

Model No.	Shaft diameter d1	L	B	H	b ±0.02	h ±0.02	B1	H1	P	X	Y	Z	Bearing	Snap ring	Weight (Kgs)
LFA12	12	18	62	31	31	15.5	30	25.5	46	9	14	12.5	6801ZZ	R21	0.2
LFA15	15	18	70	38	35	20	36	30	52	9	14	10	6902ZZ	R28	0.26
LFA20	20	22	80	41	40	22	41	32	60	11	17	13	6804ZZ	R32	0.35
LFA25	25	22	95	58	47.5	30	56	45	75	11	17	15	6005ZZ	R47	0.61

Support Unit EK (fixed-side rectangular type)

Order Coding	Model No.	Surface treatment	Applicable ballscrew accuracy grade	Bearing		Delivery date
				Model No.	Max.Starting torque (gf-cm)	
EK06_C5	EK06	Black Oxide	C5	706A P0	50	EX-STOCK
EK06_C3			C3	706A P5	50	EX-STOCK
EK06_C5N		Electroless Nickel Plating	C5	706A P0	50	1 day
EK06_C3N			C3	706A P5	50	1 day
EK08	EK08	Black Oxide	C3~C10	708A P5	90	EX-STOCK
EK08_C5			C5	708A P0	90	EX-STOCK
EK08_C3			C3	708A P5	90	EX-STOCK
EK08_N		Electroless Nickel Plating	C3~C10	708A P5	90	1 day
EK08_C5N			C5	708A P0	90	1 day
EK08_C3N			C3	708A P5	90	1 day
EK10	EK10	Black Oxide	C3~C10	7000A P5	190	EX-STOCK
EK10_C5			C5	7000A P0	190	EX-STOCK
EK10_C3			C3	7000A P5	190	EX-STOCK
EK10_N		Electroless Nickel Plating	C3~C10	7000A P5	190	1 day
EK10_C5N			C5	7000A P0	190	1 day
EK10_C3N			C3	7000A P5	190	2 days
EK12	EK12	Black Oxide	C3~C10	7001A P5	210	EX-STOCK
EK12_C5			C5	70001A P0	210	EX-STOCK
EK12_C3			C3	7001A P5	210	EX-STOCK
EK12_N		Electroless Nickel Plating	C3~C10	7001A P5	210	EX-STOCK
EK12_C5N			C5	7001A P0	210	EX-STOCK
EK12_C3N			C3	7001A P5	210	2 days

Black Oxide (Application : General case)

Electroless Nickel Plating (Application : Clean room)

Black Oxide (Application : General case)

Electroless Nickel Plating (Application : Clean room)

Note :

1. All types make Preload.
2. All of bearings use Japanese & Taiwanese brand bearings(Model No. in blue), Assembly by DF way. The most suitable way for ballscrew use.

Support Unit EK (fixed-side rectangular type)

Order Coding	Model No.	Surface treatment	Applicable ballscrew accuracy grade	Bearing		Delivery date
				Model No.	Max.Starting torque (gf-cm)	
EK15	EK15	Black Oxide	C3~C10	7002A P5	230	EX-STOCK
EK15_C5			C5	7002A P0	230	EX-STOCK
EK15_C3			C3	7002A P5	230	EX-STOCK
EK15		Electroless Nickel Plating	C3~C10	7002A P5	230	1 day
EK15_C5N			C5	7002A P0	230	1 day
EK15_C3N			C3	7002A P5	230	2 days
EK20	EK20	Black Oxide	C3~C10	7204A P5	550	EX-STOCK
EK20_C5			C5	7204A P0	550	EX-STOCK
EK20B_C5			C5	7204B P0	660	EX-STOCK
EK20_C3			C3	7204A P5	550	2 days
EK20_N		Electroless Nickel Plating	C3~C10	7204A P5	550	1 day
EK20_C5N			C5	7204A P0	550	1 day
EK20B_C5N			C5	7204B P0	660	1 day
EK20_C3N			C3	7204A P5	550	2 days

Black Oxide (Application : General case)

Electroless Nickel Plating (Application : Clean room)

Note :
1. All types make Preload.
2. All of bearings use Japanese & Taiwanese brand bearings(Model No. in blue), Assembly by DF way. The most suitable way for ballscrew use.

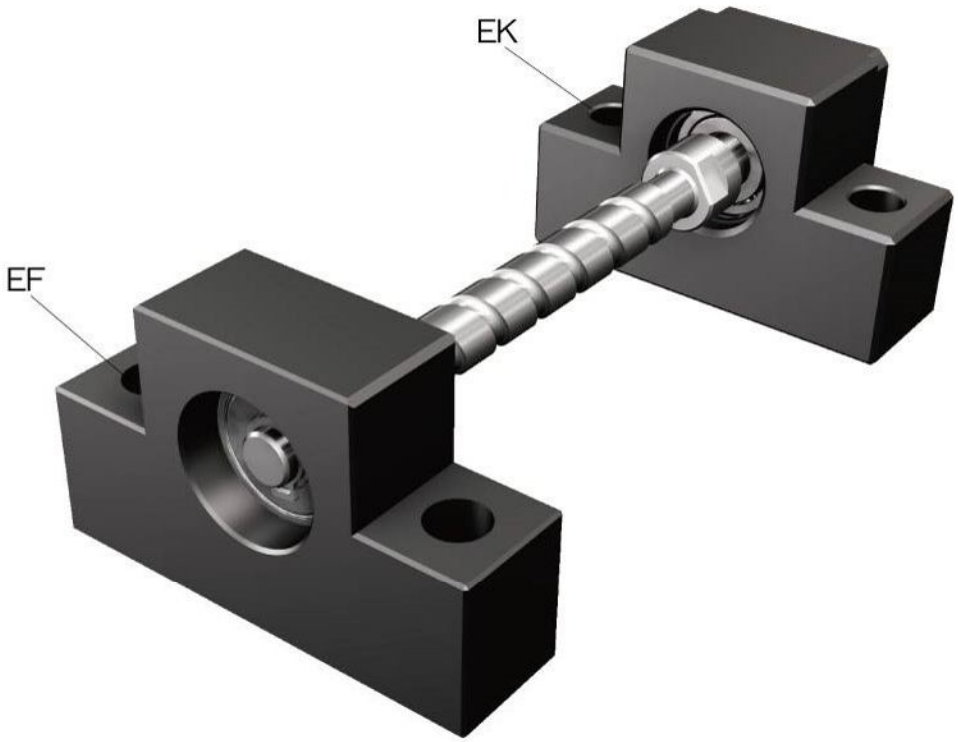

Support Unit EK
(fixed-side rectangular type)

EK05

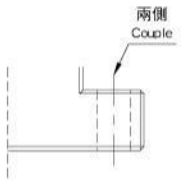

Park No.	Part name	Qty
1	Housing	1
2	Bearing	1 set
3	Holding lid	1
4	Collar	2
5	Seal	1 (2)
6	Lock nut	1

EK06,EK08

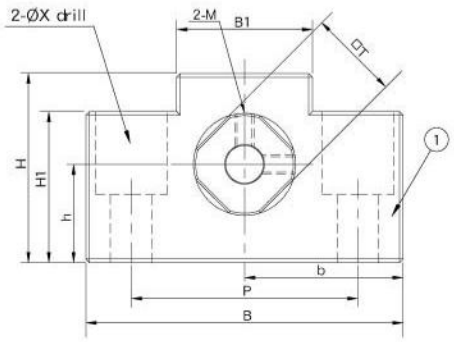

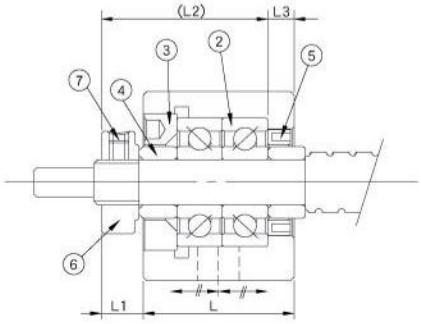

(EK05~08)

EK10~EK20

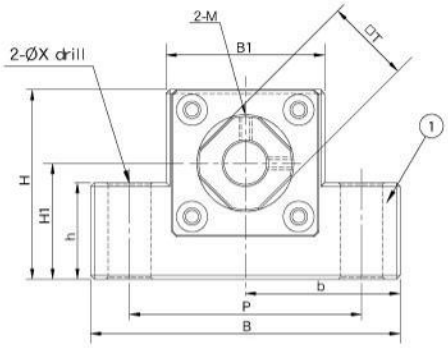

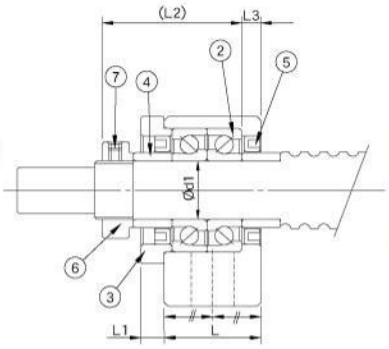

(EK10~20)

Unit : mm

Model No.	Shaft diameter d1	L	L1	L2	L3	B	H	b ±0.02	h ±0.02	B1	H1	P	X	Y	Z	M	T	Weight (Kgs)
EK05	5	16.5	5.5	18.5	3.5	36	21	18	11	20	8	28	4.5	-	-	M3	11	0.1
EK06	6	20	5.5	22	3.5	42	25	21	13	18	20	30	5.5	9.5	11	M3	12	0.15
EK08	8	23	7	26	4	52	32	26	17	25	26	38	6.6	11	12	M3	14	0.26
EK10-1	10	24	6	29.5	6	65	43	32.5	21	36	20	52	6.6	-	-	M3	16	0.45
EK10	10	24	6	29.5	6	70	43	35	25	36	24	52	9	-	-	M3	16	0.45
EK12	12	24	6	29.5	6	70	43	35	25	36	24	52	9	-	-	M4	19	0.44
EK15	15	25	6	36	5	80	49	40	30	41	25	60	11	-	-	M4	22	0.56
EK20	20	42	10	50	10	95	58	47.5	30	56	25	75	11	-	-	M4	30	1.34

Support Unit EF (Supported-side rectangular type)

Order Coding	Model No.	Surface treatment	Applicable ballscrew accuracy grade	Bearing	Delivery date
EF06_C7	EF06	Black Oxide	C7	606ZZ	EX-STOCK
EF06_C3			C3 C5	606ZZ	EX-STOCK
EF06_C7N		Electroless Nickel Plating	C7	606VV	1 day
EF06_C3N			C3 C5	606VV	1 day
EF08_C7	EF08	Black Oxide	C7	606ZZ	EX-STOCK
EF08_C3			C3 C5	606ZZ	EX-STOCK
EF08_C7N		Electroless Nickel Plating	C7	606VV	1 day
EF08_C3N			C3 C5	606VV	1 day
EF10_C7	EF10	Black Oxide	C7	608ZZ	EX-STOCK
EF10_C3			C3 C5	608ZZ	EX-STOCK
EF10_C7N		Electroless Nickel Plating	C7	608DD	EX-STOCK
EF10_C3N			C3 C5	608DD	1 day
EF12_C7	EF12	Black Oxide	C7	6000ZZ	EX-STOCK
EF12_C3			C3 C5	6000ZZ	EX-STOCK
EF12_C7N		Electroless Nickel Plating	C7	6000DDU	EX-STOCK
EF12_C3N			C3 C5	6000DDU	1 day
EF15_C7	EF15	Black Oxide	C7	6002ZZ	EX-STOCK
EF15_C3			C3 C5	6002ZZ	EX-STOCK
EF15_C7N		Electroless Nickel Plating	C7	6002DDU	EX-STOCK
EF15_C3N			C3 C5	6002DDU	EX-STOCK
EF20_C7	EF20	Black Oxide	C7	6204ZZ	EX-STOCK
EF20_C3			C3 C5	6204ZZ	EX-STOCK
EF20_C7N		Electroless Nickel Plating	C7	6204DDU	EX-STOCK
EF20_C3N			C3 C5	6204DDU	EX-STOCK

Black Oxide (Application : General case)

Electroless Nickel Plating(Application : Clean room)

Note :
1. It is used double pressed steel cages for Black Oxide type support units .
2. It is used double plastic cages for Electroless Nickel Plating type support units .
3. All of bearings use Japanese & Taiwanese brand bearings.

Support Unit EF
(supported-side rectangular type)

Park No.	Part name	Qty
1	Housing	1
2	Bearing	1 set
3	Snap ring	1

EF

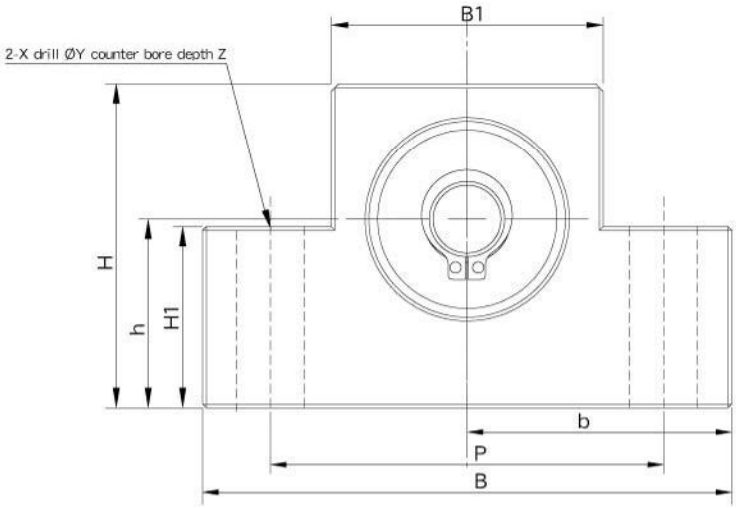

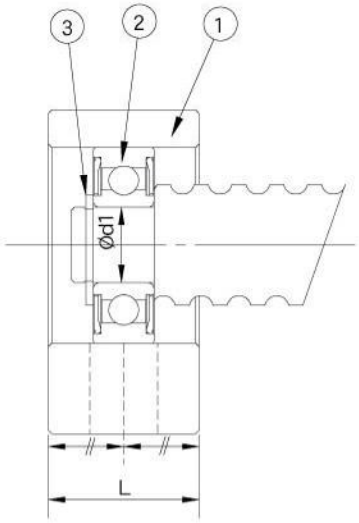

Unit : mm

Model No.	Shaft diameter d1	L	B	H	b ±0.02	h ±0.02	B1	H1	P	X	Y	Z	Bearing	Snap ring	Weight (Kgs)
EF06	6	12	42	25	21	13	18	20	30	5.5	9.5	11	606ZZ	S 06	0.1
EF08	6	14	52	32	26	17	25	26	38	6.6	11	12	606ZZ	S 06	0.15
EF10	8	20	70	43	35	25	36	24	52	9	-	-	608ZZ	S 08	0.33
EF12	10	20	70	43	35	25	36	24	52	9	-	-	6000ZZ	S 10	0.32
EF15	15	20	80	49	40	30	41	25	60	9	-	-	6002ZZ	S 15	0.38
EF20	20	26	95	58	47.5	30	56	25	75	11	-	-	6204ZZ	S 20	0.64

Support Unit BK (fixed-side rectangular type)

Order Coding	Model No.	Surface treatment	Applicable ballscrew accuracy grade	Bearing		Delivery date
				Model No.	Max.Starting torque (gf-cm)	
BK10	BK10	Black Oxide	C3~C10	7000A P5	190	EX-STOCK
BK10_C5			C5	7000A P0	190	EX-STOCK
BK10_C3			C3	7000A P5	190	EX-STOCK
BK10_N		Electroless Nickel Plating	C3~C10	7000A P5	190	EX-STOCK
BK10_C5N			C5	7000A P0	190	EX-STOCK
BK10_C3N			C3	7000A P5	190	2 days
BK12	BK12	Black Oxide	C3~C10	7001A P5	210	EX-STOCK
BK12_C5			C5	7001A P0	210	EX-STOCK
BK12_C3			C3	7001A P5	210	EX-STOCK
BK12_N		Electroless Nickel Plating	C3~C10	7001A P5	210	EX-STOCK
BK12_C5N			C5	7001A P0	210	EX-STOCK
BK12_C3N			C3	7001A P5	210	2 days
BK15	BK15	Black Oxide	C3~C10	7002A P5	230	EX-STOCK
BK15_C5			C5	7002A P0	230	EX-STOCK
BK15_C3			C3	7002A P5	230	EX-STOCK
BK15_N		Electroless Nickel Plating	C3~C10	7002A P5	230	EX-STOCK
BK15_C5N			C5	7002A P0	230	EX-STOCK
BK15_C3N			C3	7002A P5	230	2 days
BK17	BK17	Black Oxide	C3~C10	7203A P5	370	EX-STOCK
BK17_C5			C5	7203A P0	370	EX-STOCK
BK17_C3			C3	7203A P5	370	2 days
BK17_N		Electroless Nickel Plating	C3~C10	7203A P5	370	1 day
BK17_C5N			C5	7203A P0	370	1 day
BK17_C3N			C3	7203A P5	370	2 days
BK20	BK20	Black Oxide	C3~C10	7004A P5	380	EX-STOCK
BK20_C5			C5	7004A P0	380	EX-STOCK
BK20_C3			C3	7004A P5	380	2 days
BK20_N		Electroless Nickel Plating	C3~C10	7004A P5	380	EX-STOCK
BK20_C5N			C5	7004A P0	380	EX-STOCK
BK20_C3N			C3	7004A P5	380	2 days

Black Oxide (Application : General case)

Electroless Nickel Plating (Application : Clean room)

Note :
1. All types make Preload.
2. All of bearings use Japanese & Taiwanese brand bearings(Model No. in blue), Assembly by DF way. The most suitable way for ballscrew use.
3. The standard type is without Q , if required,please advise in advance.

Support Unit BK (fixed-side rectangular type)

Order Coding	Model No.	Surface treatment	Applicable ballscrew accuracy grade	Bearing		Delivery date
				Model No.	Max.Starting torque (gf-cm)	
BK25	BK25	Black Oxide	C3~C10	7205A P5	730	EX-STOCK
BK25_C5			C5	7205A P0	730	EX-STOCK
BK25B_C5			C5	7205B P0	1000	EX-STOCK
BK25_C3			C3	7205A P5	730	2 days
BK25_N		Electroless Nickel Plating	C3~C10	7205A P5	730	EX-STOCK
BK25_C5N			C5	7205A P0	730	EX-STOCK
BK25B_C5N			C5	7205B P0	1000	1 day
BK25_C3N			C3	7205A P5	730	2 days
BK30_C5	BK30	Black Oxide	C5	7206A P0	1050	EX-STOCK
BK30B_C5			C5	7206B P0	1250	EX-STOCK
BK30_C3			C3	7206A P5	1050	2 days
BK30_C5N		Electroless Nickel Plating	C5	7206A P0	1050	1 day
BK30B_C5N			C5	7206B P0	1250	1 day
BK30_C3N			C3	7206A P5	1050	2 days
BK35_C5	BK35	Black Oxide	C5	7207B P0	1320	EX-STOCK
BK35_C5N		Electroless Nickel Plating	C5	7207B P0	1320	1 day
BK40_C5	BK40	Black Oxide	C5	7208B P0	2050	EX-STOCK
BK40_C5N		Electroless Nickel Plating	C5	7208B P0	2050	1 day

Black Oxide (Application : General case)

Electroless Nickel Plating (Application : Clean room)

Note :

1. All types make Preload.
2. All of bearings use Japanese & Taiwanese brand bearings,
   Assembly by DF way. The most suitable way for ballscrew use.
3. The standard type is without Q , if required,please advise in advance.

Support Unit BK
(fixed-side rectangular type)

Park No.	Part name	Qty
1	Housing	1
2	Bearing	1 set
3	Holding lid	1
4	Collar	2
5	Seal	2
6	Lock nut	1set

BK

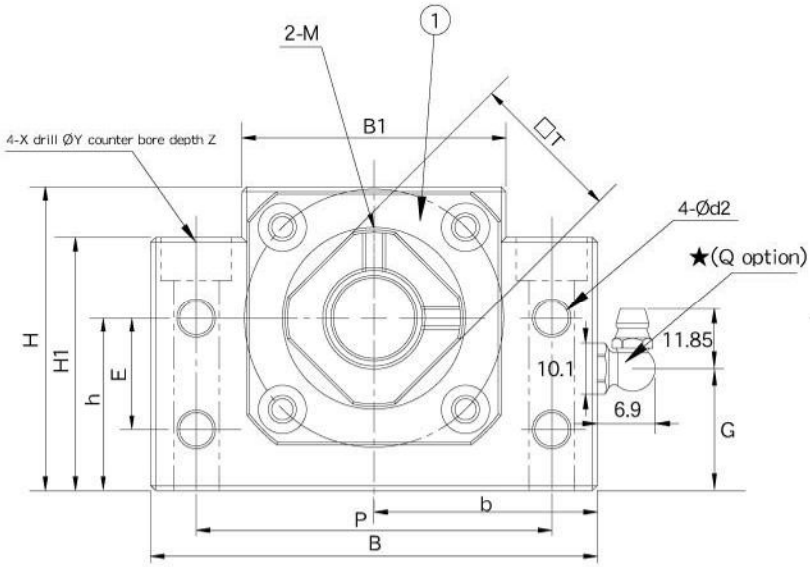

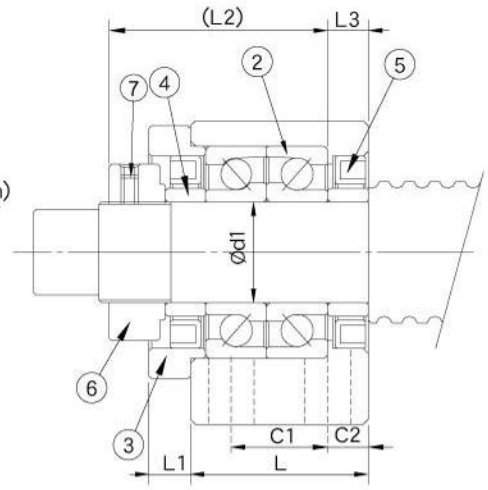

Unit : mm

Model No.	Shaft diameter d1	L	L1	L2	L3	B	H	b ±0.02	h ±0.02	B1	H1	E	P	C1	C2	d2	X	Y	Z	M	T	G	Q	Weight (Kgs)
BK10	10	25	5	29.5	5	60	39	30	22	34	32.5	15	46	13	6	5.5	6.6	10.8	5	M3	16	15	M6	0.4
BK12	12	25	5	29.5	5	60	43	30	25	34	32.5	18	46	13	6	5.5	6.6	10.8	1.5	M4	19	18	M6	0.41
BK15	15	27	6	32	6	70	48	35	28	40	38	18	54	15	6	5.5	6.6	11	6.5	M4	22	18	M6	0.58
BK17	17	35	9	44	7	86	64	43	39	50	55	28	68	19	8	6.6	9	14	8.5	M4	24	30	M6	1.3
BK20	20	35	8	43	8	88	60	44	34	52	50	22	70	19	8	6.6	9	14	8.5	M4	30	24	M6	1.2
BK25	25	42	12	54	9	106	80	53	48	64	70	33	85	22	10	9	11	17	11	M6	35	37	M6	2.35
BK30	30	45	14	61	9	128	89	64	51	76	78	33	102	23	11	11	14	20	13	M6	40	37	M6	3.33
BK35	35	50	14	67	12	140	96	70	52	88	79	35	114	26	12	11	14	20	13	M6	50	37	M6	4.4
BK40	40	61	18	76	15	160	110	80	60	100	90	37	130	33	14	14	18	26	17.5	M6	50	43	M6	6.8

Support Unit BF (Supported-side rectangular type)

Order Coding	Model No.	Surface treatment	Applicable ballscrew accuracy grade	Bearing	Delivery date
BF10_C7	BF10	Black Oxide	C7	608ZZ	EX-STOCK
BF10_C3			C3 C5	608ZZ	EX-STOCK
BF10_C7N		Electroless Nickel Plating	C7	608DD	EX-STOCK
BF10_C3N			C3 C5	608DD	EX-STOCK
BF12_C7	BF12	Black Oxide	C7	6000ZZ	EX-STOCK
BF12_C3			C3 C5	6000ZZ	EX-STOCK
BF12_C7N		Electroless Nickel Plating	C7	6000DDU	EX-STOCK
BF12_C3N			C3 C5	6000DDU	EX-STOCK
BF15_C7	BF15	Black Oxide	C7	6002ZZ	EX-STOCK
BF15_C3			C3 C5	6002ZZ	EX-STOCK
BF15_C7N		Electroless Nickel Plating	C7	6002DDU	EX-STOCK
BF15_C3N			C3 C5	6002DDU	EX-STOCK
BF17_C7	BF17	Black Oxide	C7	6203ZZ	EX-STOCK
BF17_C3			C3 C5	6203ZZ	EX-STOCK
BF17_C7N		Electroless Nickel Plating	C7	6203DDU	1 day
BF17_C3N			C3 C5	6203DDU	1 day
BF20_C7	BF20	Black Oxide	C7	6004ZZ	EX-STOCK
BF20_C3			C3 C5	6004ZZ	EX-STOCK
BF20_C7N		Electroless Nickel Plating	C7	6004DDU	EX-STOCK
BF20_C3N			C3 C5	6004DDU	EX-STOCK
BF25_C7	BF25	Black Oxide	C7	6205ZZ	EX-STOCK
BF25_C3			C3 C5	6205ZZ	EX-STOCK
BF25_C7N		Electroless Nickel Plating	C7	6205DDU	EX-STOCK
BF25_C3N			C3 C5	6205DDU	1 day
BF30_C7	BF30	Black Oxide	C7	6206ZZ	EX-STOCK
BF30_C3			C3 C5	6206ZZ	EX-STOCK
BF30_C7N		Electroless Nickel Plating	C7	6206DDU	1 day
BF30_C3N			C3 C5	6206DDU	1 day
BF35_C7	BF35	Black Oxide	C7	6207ZZ	EX-STOCK
BF35_C3			C3 C5	6207ZZ	EX-STOCK
BF35_C7N		Electroless Nickel Plating	C7	6207DDU	1 day
BF35_C3N			C3 C5	6207DDU	1 day
BF40_C7	BF40	Black Oxide	C7	6208ZZ	EX-STOCK
BF40_C3			C3 C5	6208ZZ	EX-STOCK
BF40_C7N		Electroless Nickel Plating	C7	6208DDU	1 day
BF40_C3N			C3 C5	6208DDU	1 day

Black Oxide(Application : General case)

Electroless Nickel Plating(Application : Clean room)

Note :

1. It is used double pressed steel cages for Black Oxide type support units .
2. It is used double plastic cages for Electroless Nickel Plating type support units .
3. All of bearings use Japanese & Taiwanese brand bearings.

Support Unit BF
(Supported-side rectangular type)

Park No.	Part name	Qty
1	Housing	1
2	Bearing	1 set
3	Snap ring	1

BF

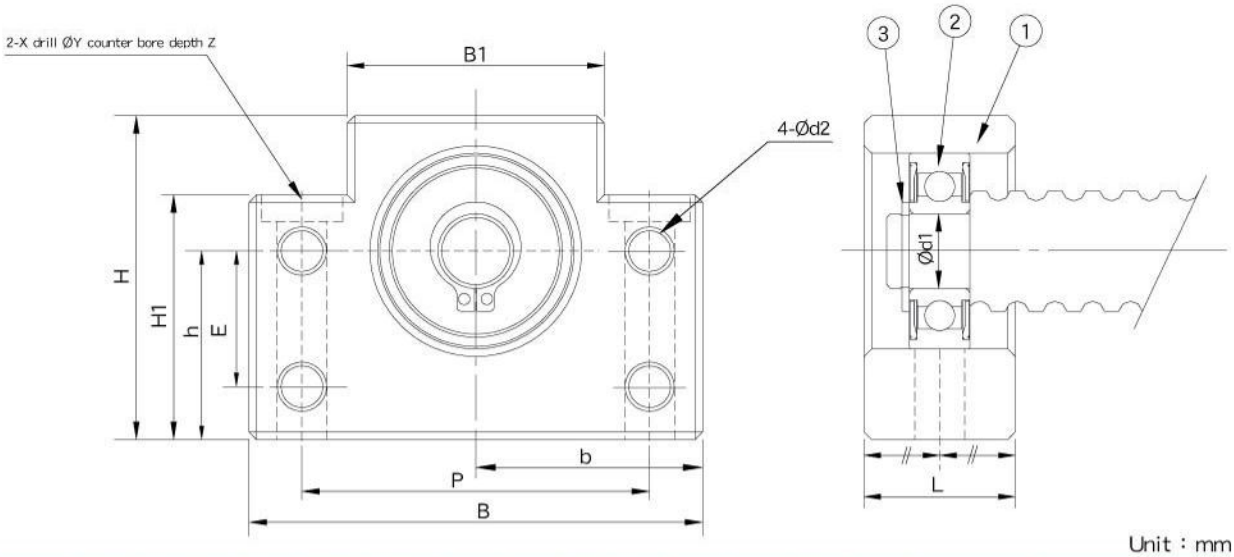

Unit : mm

Model No.	Shaft diameter d1	L	B	H	b ±0.02	h ±0.02	B1	H1	E	P	d2	X	Y	Z	Bearing	Snap ring	Weight (Kgs)
BF10	8	20	60	39	30	22	34	32.5	15	46	5.5	6.6	10.8	5	608ZZ	S 08	0.3
BF12	10	20	60	43	30	25	34	32.5	18	46	5.5	6.6	10.8	1.5	6000ZZ	S 10	0.3
BF15	15	20	70	48	35	28	40	38	18	54	5.5	6.6	11	6.5	6002ZZ	S 15	0.4
BF17	17	23	86	64	43	39	50	55	28	68	6.6	9	14	8.5	6203ZZ	S 17	0.75
BF20	20	26	88	60	44	34	52	50	22	70	6.6	9	14	8.5	6004ZZ	S 20	0.76
BF20H	20	26	88	74	44	48	52	64	-	70	-	9	14	8.5	6004ZZ	S20	1.02
BF25	25	30	106	80	53	48	64	70	33	85	9	11	17	11	6205ZZ	S 25	1.43
SF25	25	32	128	89	64	51	76	78	-	102	-	14	20	13	6205ZZ	S 25	-
BF30	30	32	128	89	64	51	76	78	33	102	11	14	20	13	6206ZZ	S 30	1.94
BF35	35	32	140	96	70	52	88	79	35	114	11	14	20	13	6207ZZ	S 35	2.25
SF40	40	32	140	96	70	52	88	79	-	114	-	14	20	13	6208ZZ	S 40	-
BF40	40	37	160	110	80	60	100	90	37	130	14	18	26	17.5	6208ZZ	S 40	3.3

Support Unit FKA (fixed-side round type)

Order Codin	Model No.	Surface treatment	Applicable ballscrew accuracy grade	Bearing		Delivery date
				Model No.	Max.Starting torque (gf-cm)	
FKA06_C5	FKA06	Black Oxide	C5	706A P0	50	EX-STOCK
FKA06_C3			C3	706A P5	50	1 day
FKA06_C5N		Electroless Nickel Plating	C5	706A P0	50	2 days
FKA06_C3N			C3	706A P5	50	2 days
FKA08	FKA08	Black Oxide	C3~C10	708A P5	90	EX-STOCK
FKA08_C5			C5	708A P0	90	EX-STOCK
FKA08_C3			C3	708A P5	90	1 day
FKA08_N		Electroless Nickel Plating	C3~C10	708A P5	90	2 days
FKA08_C5N			C5	708A P0	90	2 days
FKA08_C3N			C3	708A P5	90	2 days
FKA10	FKA10	Black Oxide	C3~C10	7000A P5	190	EX-STOCK
FKA10_C5			C5	7000A P0	190	EX-STOCK
FKA10_C3			C3	7000A P5	190	1 day
FKA10_N		Electroless Nickel Plating	C3~C10	7000A P5	190	2 days
FKA10_C5N			C5	7000A P0	190	2 days
FKA10_C3N			C3	7000A P5	190	2 days
FKA12	FKA12	Black Oxide	C3~C10	7001A P5	210	EX-STOCK
FKA12_C5			C5	7001A P0	210	EX-STOCK
FKA12_C3			C3	7001A P5	210	1 day
FKA12_N		Electroless Nickel Plating	C3~C10	7001A P5	210	2 days
FKA12_C5N			C5	7001A P0	210	2 days
FKA12_C3N			C3	7001A P5	210	2 days
FKA15	FKA15	Black Oxide	C3~C10	7002A P5	230	EX-STOCK
FKA15_C5			C5	7002A P0	230	EX-STOCK
FKA15_C3			C3	7002A P5	230	1 day
FKA15_N		Electroless Nickel Plating	C3~C10	7002A P5	230	2 days
FKA15_C5N			C5	7002A P0	230	2 days
FKA15_C3N			C3	7002A P5	230	2 days
FKA20	FKA20	Black Oxide	C3~C10	7204A P5	550	EX-STOCK
FKA20_C5			C5	7204A P0	550	EX-STOCK
FKA20B_C5			C5	7204B P0	660	1 day
FKA20_C3			C3	7204A P5	550	2 days
FKA20_N		Electroless Nickel Plating	C3~C10	7204A P5	550	2 days
FKA20_C5N			C5	7204A P0	550	2 days
FKA20B_C5N			C5	7204B P0	660	2 days
FKA20_C3N			C3	7204A P5	550	2 days

(FKA06~FKA08)

Black Oxide (Application : General case)

(FKA06~FKA08)

Electroless Nickel Plating (Application : Clean room)

(FKA10~FKA20)

Black Oxide (Application : General case)

(FKA10~FKA20)

Electroless Nickel Plating (Application : Clean room)

Note :

1. All types make Preload.
2. All of bearings use Japanese & Taiwanese brand bearings(Model No. in blue), Assembly by DF way. The most suitable way for ballscrew use.

Support Unit FKA
(fixed-side round type)

Park No.	Part name	Qty
1	Housing	1
2	Bearing	1 set
3	Holding lid	1
4	Collar	2
5	Seal	1~2
6	Lock nut	1set

(FKA06~08)

(FKA10~20)

FKA06~FKA20

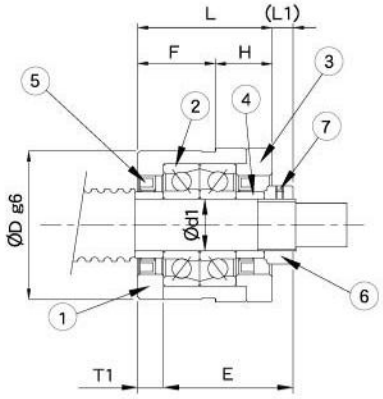

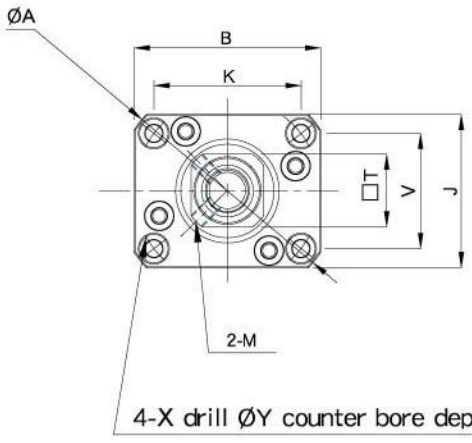

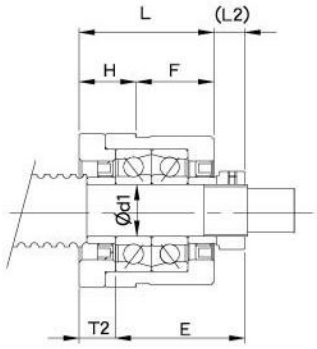

Mounting method A

Mounting method B

Unit : mm

Model No.	Shaft diameter d1	L	H	F	E	Dg6		A	B	J	K	V	Mounting method A L1	Mounting method A T1	Mounting method B L2	Mounting method B T2	X	Y	Z	M	T	Weight Kgs
FKA06	6	20	7	13	22	28	-0.007 -0.02	44	36	30	26.79	20.93	5.5	3.5	6.5	4.5	3.4	6.5	4	M3	12	0.14
FKA08	8	23	9	14	26	28	-0.007 -0.02	44	36	30	26.79	20.93	7	4	8	5	3.4	6.5	4	M3	14	0.15
FKA10	10	27	10	17	29.5	36	-0.009 -0.025	56	48	39	35.7	27.39	7.5	5	8.5	6	4.5	8	4	M3	16	0.26
FKA12	12	27	10	17	29.5	36	-0.009 -0.025	56	48	39	35.7	27.39	7.5	5	8.5	6	4.5	8	4	M4	19	0.3
FKA15	15	32	15	17	36	40	-0.009 -0.025	65	56	43	39.4	30.78	10	6	12	8	5.5	9.5	6	M4	22	0.37
FKA20	20	52	22	30	50	57	-0.010 -0.029	86	72	59	56.74	44.33	8	10	12	14	6.6	11	10	M4	30	1.28

Support Unit FK (fixed-side round type)

Order Coding	Model No.	Surface treatment	Applicable ballscrew accuracy grade	Bearing		Delivery date
				Model No.	Max.Starting torque (gf-cm)	
FK06_C5	FK06	Black Oxide	C5	706A P0	50	EX-STOCK
FK06_C3			C3	706A P5	50	EX-STOCK
FK06_C5N		Electroless Nickel Plating	C5	706A P0	50	1 day
FK06_C3N			C3	706A P5	50	1 day
FK08	FK08	Black Oxide	C3~C10	708A P5	90	EX-STOCK
FK08_C5			C5	708A P0	90	EX-STOCK
FK08_C3			C3	708A P5	90	EX-STOCK
FK08_N		Electroless Nickel Plating	C3~C10	708A P5	90	1 day
FK08_C5N			C5	708A P0	90	1 day
FK08_C3N			C3	708A P5	90	1 day
FK10	FK10	Black Oxide	C3~C10	7000A P5	190	EX-STOCK
FK10_C5			C5	7000A P0	190	EX-STOCK
FK10_C3			C3	7000A P5	190	EX-STOCK
FK10_N		Electroless Nickel Plating	C3~C10	7000A P5	190	1 day
FK10_C5N			C5	7000A P0	190	1 day
FK10_C3N			C3	7000A P5	190	2 days
FK12	FK12	Black Oxide	C3~C10	7001A P5	210	EX-STOCK
FK12_C5			C5	7001A P0	210	EX-STOCK
FK12_C3			C3	7001A P5	210	EX-STOCK
FK12_N		Electroless Nickel Plating	C3~C10	7001A P5	210	EX-STOCK
FK12_C5N			C5	7001A P0	210	EX-STOCK
FK12_C3N			C3	7001A P5	210	2 days
FK15	FK15	Black Oxide	C3~C10	7002A P5	230	EX-STOCK
FK15_C5			C5	7002A P0	230	EX-STOCK
FK15_C3			C3	7002A P5	230	EX-STOCK
FK15_N		Electroless Nickel Plating	C3~C10	7002A P5	230	EX-STOCK
FK15_C5N			C5	7002A P0	230	EX-STOCK
FK15_C3N			C3	7002A P5	230	2 days

Black Oxide (Application : General case)

Electroless Nickel Plating(Application : Clean room)

Black Oxide (Application : General case)

Electroless Nickel Plating (Application : Clean room)

Note :

1. All types make Preload.
2. All of bearings use Japanese & Taiwanese brand bearings(Model No. in blue), Assembly by DF way. The most suitable way for ballscrew use.

Support Unit FK (fixed-side round type)

Order Coding	Model No.	Surface treatment	Applicable ballscrew accuracy grade	Bearing		Delivery date
				Model No.	Max.Starting torque (gf-cm)	
FK17	FK17	Black Oxide	C3~C5	7203A P5	370	EX-STOCK
FK17_C5			C5	7203A P0	370	EX-STOCK
FK17_C3			C3	7203A P5	370	2 days
FK17_N		Electroless Nickel Plating	C3~C5	7203A P5	370	1 day
FK17_C5N			C5	7203A P0	370	1 day
FK17_C3N			C3	7203A P5	370	2 days
FK20	FK20	Black Oxide	C3~C5	7204A P5	550	EX-STOCK
FK20_C5			C5	7204A P0	550	EX-STOCK
FK20B_C5			C5	7204B P0	660	EX-STOCK
FK20_C3			C3	7204A P5	550	2 days
FK20_N		Electroless Nickel Plating	C3~C5	7204A P5	550	EX-STOCK
FK20_C5N			C5	7204A P0	550	EX-STOCK
FK20B_C5N			C5	7204B P0	660	1 day
FK20_C3N			C3	7204A P5	550	2 days
FK25	FK25	Black Oxide	C3~C5	7205A P5	730	EX-STOCK
FK25_C5			C5	7205A P0	730	EX-STOCK
FK25B_C5			C5	7205B P0	1000	EX-STOCK
FK25_C3			C3	7205A P5	730	2 days
FK25_N		Electroless Nickel Plating	C3~C5	7205A P5	730	EX-STOCK
FK25_C5N			C5	7205A P0	730	EX-STOCK
FK25B_C5N			C5	7205B P0	1000	1 day
FK25_C3N			C3	7205A P5	730	2 days
FK30_C5	FK30	Black Oxide	C5	7206A P0	1050	EX-STOCK
FK30B_C5			C5	7206B P0	1250	EX-STOCK
FK30_C3			C3	7206A P5	1050	2 days
FK30_C5N		Electroless Nickel Plating	C5	7206A P0	1050	1 day
FK30B_C5N			C5	7206B P0	1250	1 day
FK30_C3N			C3	7206A P5	1050	2 days

Black Oxide(Application : General case)

Electroless Nickel Plating (Application : Clean room)

Note :
1.All types make Preload.
2. All of bearings use Japanese & Taiwanese brand bearings(Model No. in blue), Assembly by DF way. The most suitable way for ballscrew use.
3. The standard type is without Q , if required,please advise in advance.

Support Unit FK
(fixed-side round type)

Park No.	Part name	Qty
1	Housing	1
2	Bearing	1 set
3	Holding lid	1
4	Collar	2
5	Seal	1
6	Lock nut	1set

FK05～FK08

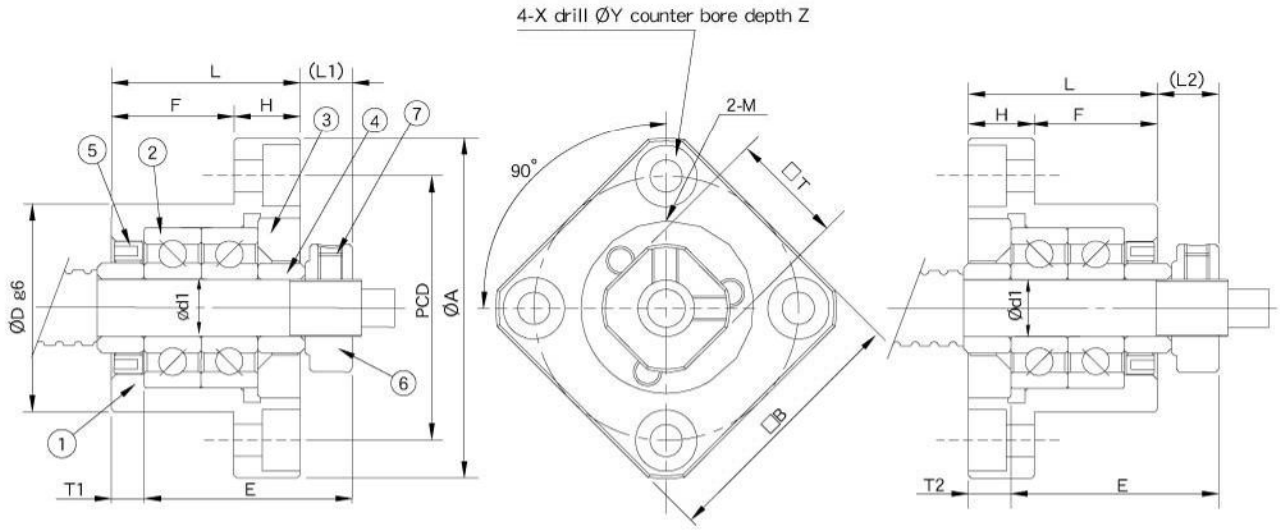

Mounting method A

Mounting method B

Unit : mm

Model No.	Shaft diameter d1	L	H	F	E	Dg6		A	PCD	B	Mounting method A L1	Mounting method A T1	Mounting method B L2	Mounting method B T2	X	Y	Z	M	T	Weight (Kgs)
FK05	5	16.5	6	10.5	18.5	20	-0.007 -0.02	34	26	26	5.5	3.5	5	3	3.4	6.5	4	M3	11	0.08
FK06	6	20	7	13	22	22	-0.007 -0.02	36	28	28	5.5	3.5	6.5	4.5	3.4	6.5	4	M3	12	0.1
FK08	8	23	9	14	26	28	-0.007 -0.02	43	35	35	7	4	8	5	3.4	6.5	4	M3	14	0.15

Support Unit FK
(fixed-side round type)

Park No.	Part name	Qty
1	Housing	1
2	Bearing	1 set
3	Holding lid	1
4	Collar	2
5	Seal	2
6	Lock nut	1set

The position of oil grease is for reference only,
please visit our website to get more information on it.

FK10~FK30

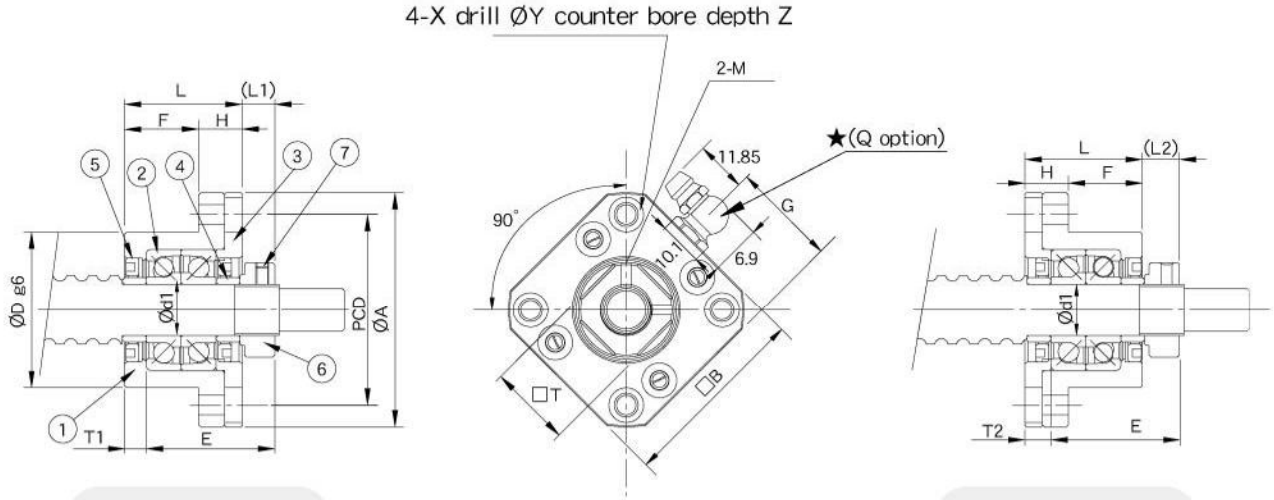

Mounting method A

Mounting method B

Unit : mm

Model No.	Shaft diameter d1	L	H	F	E	Dg6		A	PCD	B	Mounting method A L1	Mounting method A T1	Mounting method B L2	Mounting method B T2	X	Y	Z	M	T	G	Q	Weight (Kgs)
FK10	10	27	10	17	29.5	34	-0.009 -0.025	52	42	42	7.5	5	8.5	6	4.5	8	4	M3	16	-	-	0.23
FK12	12	27	10	17	29.5	36	-0.009 -0.025	54	44	44	7.5	5	8.5	6	4.5	8	4	M4	19	-	-	0.25
FK15	15	32	15	17	36	40	-0.009 -0.025	63	50	52	10	6	12	8	5.5	9.5	6	M4	22	26	M6	0.39
FK17	17	45	22	23	47	50	-0.009 -0.025	77	62	61	11	9	14	12	6.6	11	10	M4	24	30.5	M6	0.81
FK20	20	52	22	30	50	57	-0.010 -0.029	85	70	68	8	10	12	14	6.6	11	10	M4	30	34	M6	1.02
FK25	25	57	27	30	59	63	-0.010 -0.029	98	80	79	13	10	20	17	9	15	13	M5	35	39.5	M6	1.48
FK30	30	62	30	32	61	75	-0.010 -0.029	117	95	93	11	12	17	18	11	17.5	15	M6	40	46.5	M6	2.32

Support Unit FF (Supported-side round type)

Order Coding	Model No.	Surface treatment	Applicable ballscrew accuracy grade	Bearing	Delivery date
FF06_C7	FF06	Black Oxide	C7	606ZZ	EX-STOCK
FF06_C3			C3 C5	606ZZ	EX-STOCK
FF06_C7N		Electroless Nickel Plating	C7	606VV	1 day
FF06_C3N			C3 C5	606VV	1 day
FF10_C7	FF10	Black Oxide	C7	608ZZ	EX-STOCK
FF10_C3			C3 C5	608ZZ	EX-STOCK
FF10_C7N		Electroless Nickel Plating	C7	608DD	1 day
FF10_C3N			C3 C5	608DD	1 day
FF12_C7	FF12	Black Oxide	C7	6000ZZ	EX-STOCK
FF12_C3			C3 C5	6000ZZ	EX-STOCK
FF12_C7N		Electroless Nickel Plating	C7	6000DDU	1 day
FF12_C3N			C3 C5	6000DDU	EX-STOCK
FF15_C7	FF15	Black Oxide	C7	6002ZZ	EX-STOCK
FF15_C3			C3 C5	6002ZZ	EX-STOCK
FF15_C7N		Electroless Nickel Plating	C7	6002DDU	EX-STOCK
FF15_C3N			C3 C5	6002DDU	EX-STOCK
FF17_C7	FF17	Black Oxide	C7	6203ZZ	EX-STOCK
FF17_C3			C3 C5	6203ZZ	EX-STOCK
FF17_C7N		Electroless Nickel Plating	C7	6203DDU	1 day
FF17_C3N			C3 C5	6203DDU	1 day
FF20_C7	FF20	Black Oxide	C7	6204ZZ	EX-STOCK
FF20_C3			C3 C5	6204ZZ	EX-STOCK
FF20_C7N		Electroless Nickel Plating	C7	6204DDU	EX-STOCK
FF20_C3N			C3 C5	6204DDU	1 day
FF25_C7	FF25	Black Oxide	C7	6205ZZ	EX-STOCK
FF25_C3			C3 C5	6205ZZ	EX-STOCK
FF25_C7N		Electroless Nickel Plating	C7	6205DDU	EX-STOCK
FF25_C3N			C3 C5	6205DDU	EX-STOCK
FF30_C7	FF30	Black Oxide	C7	6206ZZ	EX-STOCK
FF30_C3			C3 C5	6206ZZ	EX-STOCK
FF30_C7N		Electroless Nickel Plating	C7	6206DDU	1 day
FF30_C3N			C3 C5	6206DDU	1 day

Black Oxide(Application : General case)

Electroless Nickel Plating(Application : Clean room)

Note :

1. It is used double pressed steel cages for Black Oxide type support units .
2. It is used double plastic cages for Electroless Nickel Plating type support units .
3. All of bearings use Japanese & Taiwanese brand bearings.

Support Unit FF
(Supported-side round type)

Park No.	Part name	Qty
1	Housing	1
2	Bearing	1 set
3	Snap ring	1

FF

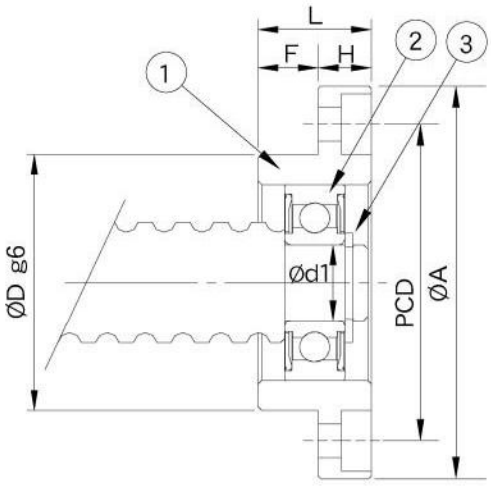

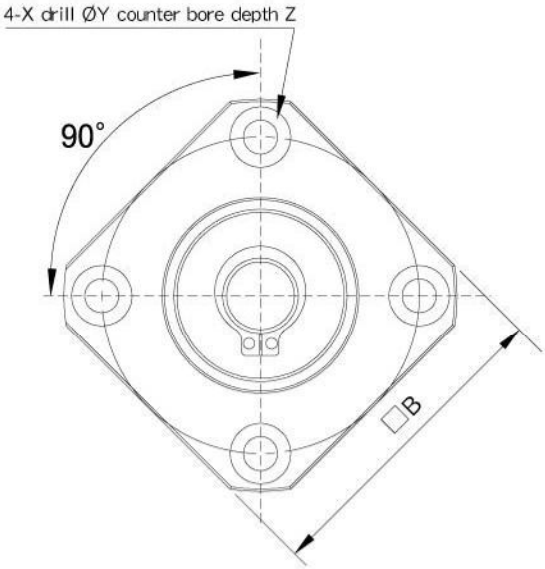

Unit : mm

Model No.	Shaft diameter d1	L	H	F	Dg6	A	PCD	B	X	Y	Z	Bearing	Snap ring	Weight (Kgs)
FF06	6	10	6	4	22 -0.007 -0.02	36	28	28	3.4	6.5	4	606ZZ	S 06	0.06
FF10	8	12	7	5	28 -0.007 -0.02	43	35	35	3.4	6.5	4	608ZZ	S 08	0.1
FF12	10	15	7	8	34 -0.009 -0.025	52	42	42	4.5	8	4	6000ZZ	S 10	0.13
FF15	15	17	9	8	40 -0.009 -0.025	63	50	52	5.5	9.5	5.5	6002ZZ	S 15	0.2
FF17	17	20	11	9	50 -0.009 -0.025	77	62	61	6.6	11	6.5	6203ZZ	S17	0.33
FF20	20	20	11	9	57 -0.010 -0.029	85	70	68	6.6	11	6.5	6204ZZ	S 20	0.43
FF25	25	24	14	10	63 -0.010 -0.029	98	80	79	9	14	8.5	6205ZZ	S 25	0.66
FF30	30	27	18	9	75 -0.010 -0.029	117	95	93	11	17	11	6206ZZ	S 30	1.03

Support Unit AK (fixed-side rectangular type)

Order Coding	Model No.	Surface treatment	Applicable ballscrew accuracy grade	Bearing		Delivery date
				Model No.	Max.Starting torque (gf-cm)	
AK10	AK10	Black Oxide	C3~C10	7000A P5	190	EX-STOCK
AK10_C5			C5	7000A P0	190	EX-STOCK
AK10_C3			C3	7000A P5	190	EX-STOCK
AK10_N		Electroless Nickel Plating	C3~C10	7000A P5	190	1 day
AK10_C5N			C5	7000A P0	190	1 day
AK10_C3N			C3	7000A P5	190	2 days
AK12	AK12	Black Oxide	C3~C10	7001A P5	210	EX-STOCK
AK12_C5			C5	7001A P0	210	EX-STOCK
AK12_C3			C3	7001A P5	210	EX-STOCK
AK12_N		Electroless Nickel Plating	C3~C10	7001A P5	210	1 day
AK12_C5N			C5	7001A P0	210	1 day
AK12_C3N			C3	7001A P5	210	2 days
AK15	AK15	Black Oxide	C3~C10	7002A P5	230	EX-STOCK
AK15_C5			C5	7002A P0	230	EX-STOCK
AK15_C3			C3	7002A P5	230	EX-STOCK
AK15_N		Electroless Nickel Plating	C3~C10	7002A P5	230	1 day
AK15_C5N			C5	7002A P0	230	1 day
AK15_C3N			C3	7002A P5	230	2 days
AK20	AK20	Black Oxide	C3~C10	7204A P5	380	EX-STOCK
AK20_C5			C5	7204A P0	380	EX-STOCK
AK20B_C5			C5	7204B P0	550	EX-STOCK
AK20_C3			C3	7204A P5	380	2 days
AK20_N		Electroless Nickel Plating	C3~C5	7204A P5	380	1 day
AK20_C5N			C5	7204A P0	380	1 day
AK20B_C5N			C5	7204A P0	550	1 day
AK20_C3N			C3	7204A P5	380	2 days
AK25_C5	AK25	Black Oxide	C5	7205A P0	730	EX-STOCK
AK25B_C5			C5	7205A P0	1000	1 day
AK25_C3			C3	7205A P5	730	2 days
AK25_C5N		Electroless Nickel Plating	C5	7205A P0	730	1 day
AK25B_C5N			C5	7205A P0	1000	1 day
AK25_C3N			C3	7205A P5	730	2 days

Black Oxide (Application : General case)

Electroless Nickel Plating (Application : Clean room)

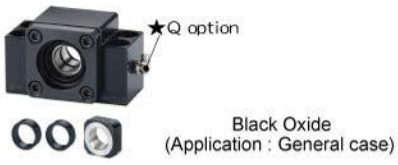

Black Oxide
(Application : General case)

Electroless Nickel Plating
(Application : Clean room)

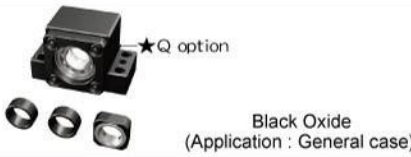

Black Oxide
(Application : General case)

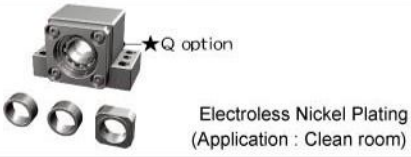

Electroless Nickel Plating
(Application : Clean room)

Note :

1. All types make Preload.
2. All of bearings use Japanese & Taiwanese brand bearings(Model No. in blue), Assembly by DF way. The most suitable way for ballscrew use.
3. The standard type is without Q , if required,please advise in advance.

Support Unit AK
(fixed-side rectangular type)

AK10～AK15

AK20

AK25

AK

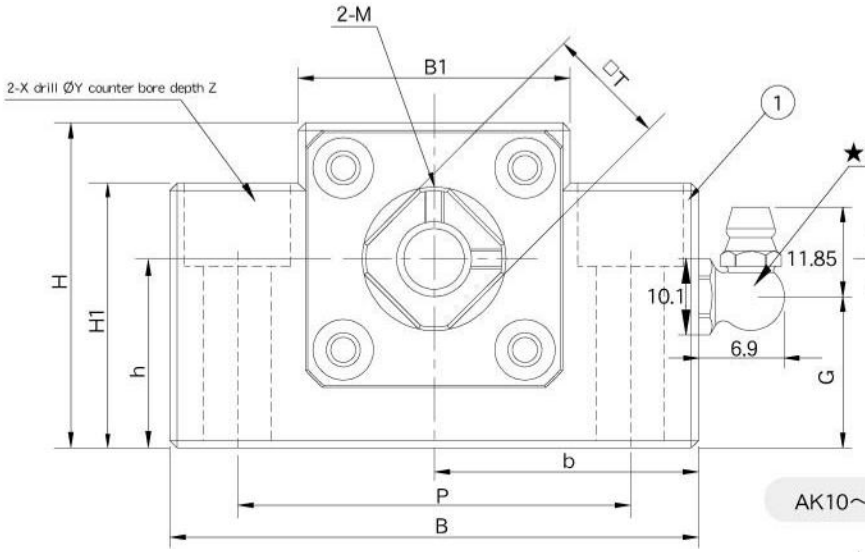

AK10～AK25

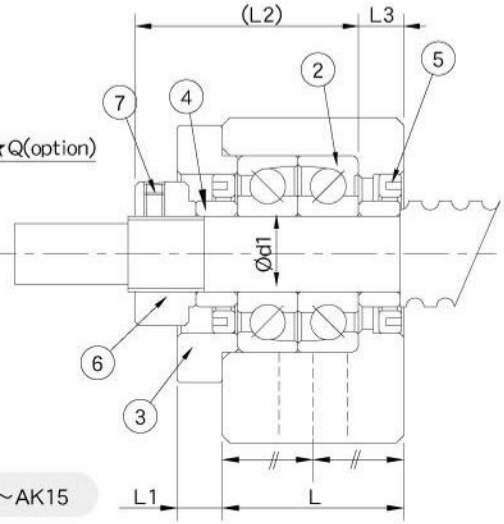

AK10～AK15

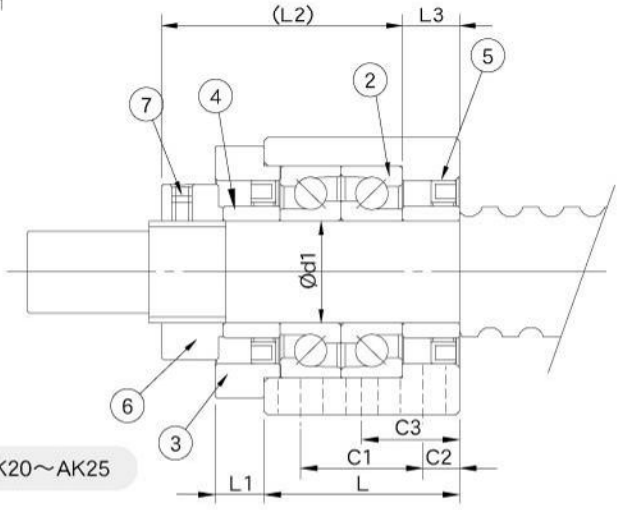

AK20～AK25

Park No.	Part name	Qty
1	Housing	1
2	Bearing	1 set
3	Holding lid	1
4	Collar	2
5	Seal	2
6	Lock nut	1set

Unit : mm

Model No.	Shaft diameter d1	L	L1	L2	L3	B	H	b ±0.02	h ±0.02	B1	H1	P	X	Y	Z	M	T	C1	C2	C3	G	Q	Weight (Kgs)
AK10	10	24	6	29.5	6	70	43	35	25	36	35	52	9	14	11	M3	16	-	-	-	20	M6	0.5
AK12	12	24	6	29.5	6	70	43	35	25	36	35	52	9	14	11	M4	19	-	-	-	20	M6	0.5
AK15	15	25	6	36	5	80	49	40	30	41	40	60	11	17	15	M4	22	-	-	-	21	M6	0.62
AK20	20	42	10	50	10	95	58	47.5	30	56	45	75	11	17	15	M4	30	22	10	-	24	M6	1.43
AK25	25	48	12	59	14	105	68	52.5	35	66	25	85	11	-	-	M5	35	30	9	24	58	-	1.92

Support Unit AF (Supported-side rectangular type)

Order Coding	Model No.	Surface treatment	Applicable ballscrew accuracy grade	Bearing	Delivery date
AF10_C7	AF10	Black Oxide	C7	608ZZ	EX-STOCK
AF10_C3			C3 C5	608ZZ	EX-STOCK
AF10_C7N		Electroless Nickel Plating	C7	608DD	1 day
AF10_C3N			C3 C5	608DD	1 day
AF12_C7	AF12	Black Oxide	C7	6000ZZ	EX-STOCK
AF12_C3			C3 C5	6000ZZ	EX-STOCK
AF12_C7N		Electroless Nickel Plating	C7	6000DDU	1 day
AF12_C3N			C3 C5	6000DDU	1 day
AF15_C7	AF15	Black Oxide	C7	6002ZZ	EX-STOCK
AF15_C3			C3 C5	6002ZZ	EX-STOCK
AF15_C7N		Electroless Nickel Plating	C7	6002DDU	1 day
AF15_C3N			C3 C5	6002DDU	1 day
AF20_C7	AF20	Black Oxide	C7	6204ZZ	EX-STOCK
AF20_C3			C3 C5	6204ZZ	EX-STOCK
AF20_C7N		Electroless Nickel Plating	C7	6204DDU	1 day
AF20_C3N			C3 C5	6204DDU	1 day
AF25_C7	AF25	Black Oxide	C7	6205ZZ	EX-STOCK
AF25_C3			C3 C5	6205ZZ	EX-STOCK
AF25_C7N		Electroless Nickel Plating	C7	6205DDU	1 day
AF25_C3N			C3 C5	6205DDU	1 day

Black Oxide (Application : General case)

Electroless Nickel Plating
(Application : Clean room)

Black Oxide
(Application : General case)

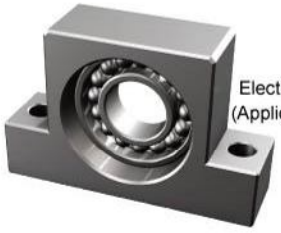

Electroless Nickel Plating
(Application : Clean room)

Note :
1. It is used double pressed steel cages for Black Oxide type support units .
2. It is used double plastic cages for Electroless Nickel Plating type support units .
3. All of bearings use Japanese & Taiwanese brand bearings.

Support Unit AF
(supported-side rectangular type)

(AF10~20)

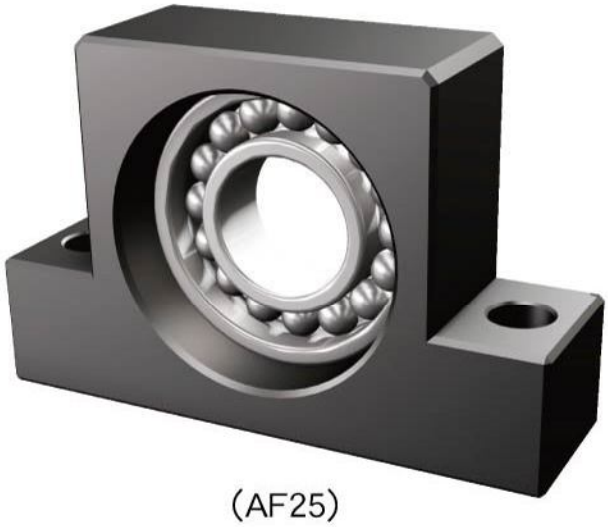

(AF25)

Park No.	Part name	Qty
1	Housing	1
2	Bearing	1 set
3	Snap ring	1

AF

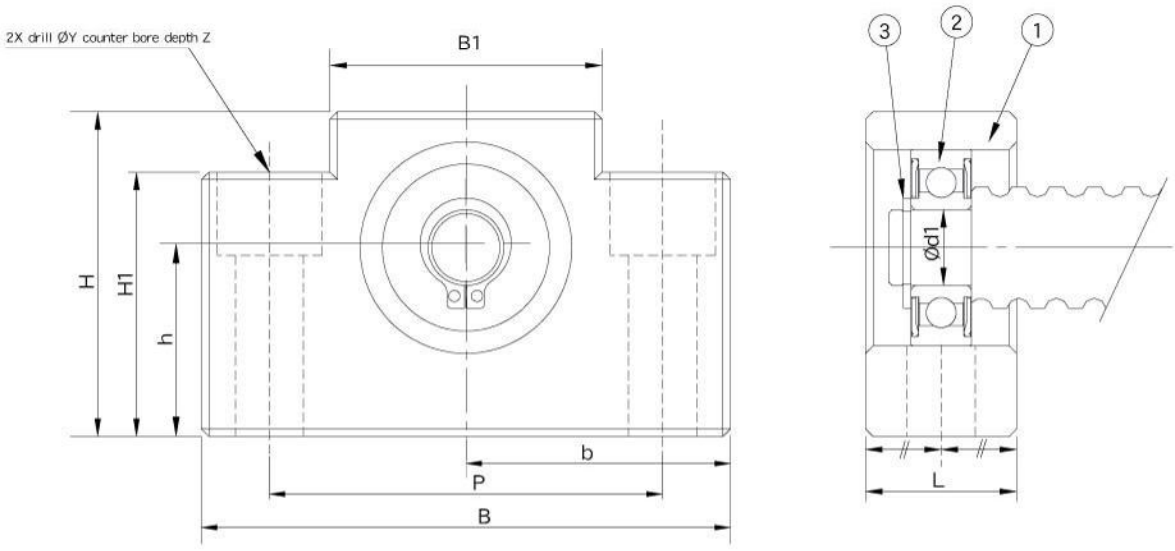

Unit : mm

Model No.	Shaft diameter d1	L	B	H	b ±0.02	h ±0.02	B1	H1	P	X	Y	Z	Bearing	Snap ring	Weight (Kgs)
AF10	8	20	70	43	35	25	36	35	52	9	14	11	608ZZ	S 08	0.36
AF12	10	20	70	43	35	25	36	35	52	9	14	11	6000ZZ	S 10	0.36
AF15	15	20	80	49	40	30	41	40	60	9	14	11	6002ZZ	S 15	0.44
AF20	20	26	95	58	47.5	30	56	45	75	11	17	15	6204ZZ	S 20	0.73
AF25	25	30	105	68	52.5	35	66	25	85	11	-	-	6205ZZ	S 25	0.95

Lock nut

Order Coding	Model No.	Surface treatment	MAX.Torgue (kgf-cm)	Setscrew MAX.Torgue (kgf-cm)
RN05	M5*PO.5	Black Oxide	15	6(M3)
RN05_N		Electroless Nickel Plating		
RN06	M6*PO.75	Black Oxide	20	6(M3)
RN06_N		Electroless Nickel Plating		
RN08	M8*P1.0	Black Oxide	25	6(M3)
RN08_N		Electroless Nickel Plating		
RN10	M10*P1.0	Black Oxide	30	6(M3)
RN10_N		Electroless Nickel Plating		
RN12	M12*P1.0	Black Oxide	65	15(M4)
RN12_N		Electroless Nickel Plating		
RN15	M15*P1.0	Black Oxide	80	15(M4)
RN15_N		Electroless Nickel Plating		
RN17	M17*P1.0	Black Oxide	95	15(M4)
RN17_N		Electroless Nickel Plating		
RN17W	M17*P1.0 (Heavy load)	Black Oxide	420	50(M6)
RN17W_N		Electroless Nickel Plating		
RN20	M20*P1.0	Black Oxide	170	15(M4)
RN20_N		Electroless Nickel Plating		
RN20W	M20*P1.0 (Heavy load)	Black Oxide	460	50(M6)
RN20W_N		Electroless Nickel Plating		
RN25	M25*P1.5	Black Oxide	210	50(M6)
RN25_N		Electroless Nickel Plating		
RN25W	M25*P1.5 (Heavy load)	Black Oxide	870	50(M6)
RN25W_N		Electroless Nickel Plating		
RN30	M30*P1.5	Black Oxide	320	50(M6)
RN30_N		Electroless Nickel Plating		
RN30W	M30*P1.5 (Heavy load)	Black Oxide	1050	50(M6)
RN30W_N		Electroless Nickel Plating		
RN35	M35*P1.5	Black Oxide	480	50(M6)
RN35_N		Electroless Nickel Plating		
RN35W	M35*P1.5 (Heavy load)	Black Oxide	1450	50(M6)
RN35W_N		Electroless Nickel Plating		
RN40	M40*P1.5	Black Oxide	720	50(M6)
RN40_N		Electroless Nickel Plating		
RN40W	M40*P1.5 (Heavy load)	Black Oxide	1600	50(M6)
RN40W_N		Electroless Nickel Plating		

Black Oxide (Application : General case)

Electroless Nickel Plating (Application : Clean room)

Heavy-load

Black Oxide (Application : General case)

Heavy-load

Electroless Nickel Plating (Application : Clean room)

Lock Nut

Park No.	Part name	Qty
1	Lock nut	1 set

Lock Nut

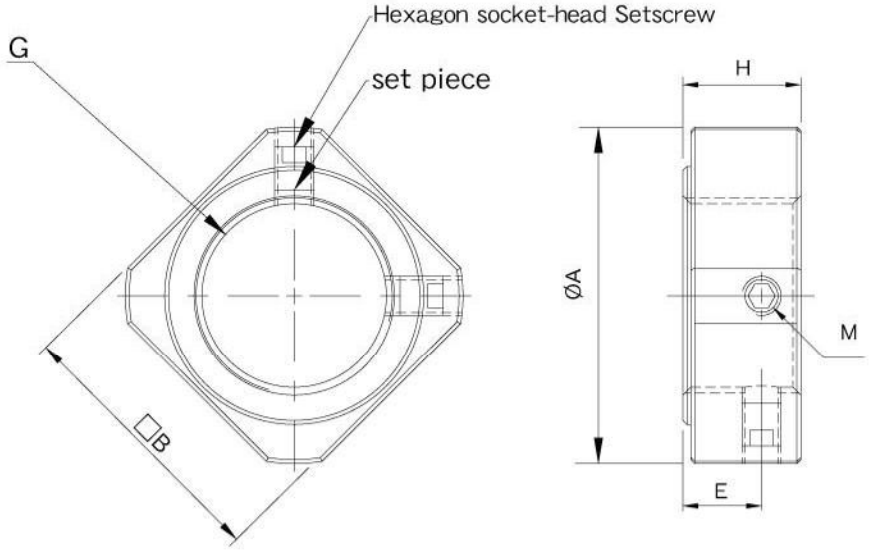

Unit : mm

Model No.	H	A	E	M	B	G
RN05 RN05_N	5	12.5	2.7	M3x0.5	11	M5x0.5
RN06 RN06_N	5	13.5	2.7	M3x0.5	12	M6x0.75
RN08 RN08_N	6.5	16.4	4	M3x0.5	14	M8x1.0
RN10 RN10_N	8	19	5.5	M3x0.5	16	M10x1.0
RN12 RN12_N	8	22.8	5.5	M4x0.7	19	M12x1.0
RN15 RN15_N	8	25.8	4.75	M4x0.7	22	M15x1.0

Unit : mm

Model No.	H	A	E	M	B	G
RN17 RN17_N	13	29	9	M4	24	M17x1.0
RN20 RN20_N	11	35	7	M4	30	M20x1.0
RN25 RN25_N	15	43	10	M6	35	M25x1.5
RN30 RN30_N	20	48	14	M6	40	M30x1.5
RN35 RN35_N	21	60	14	M6	50	M35x1.5
RN40 RN40_N	25	62	18	M6	50	M40x1.5

Lock Nut (Heavy-load)

Park No.	Part name	Qty
1	Lock nut	1 set

SPANNER

Lock Nut (Heavy-load)

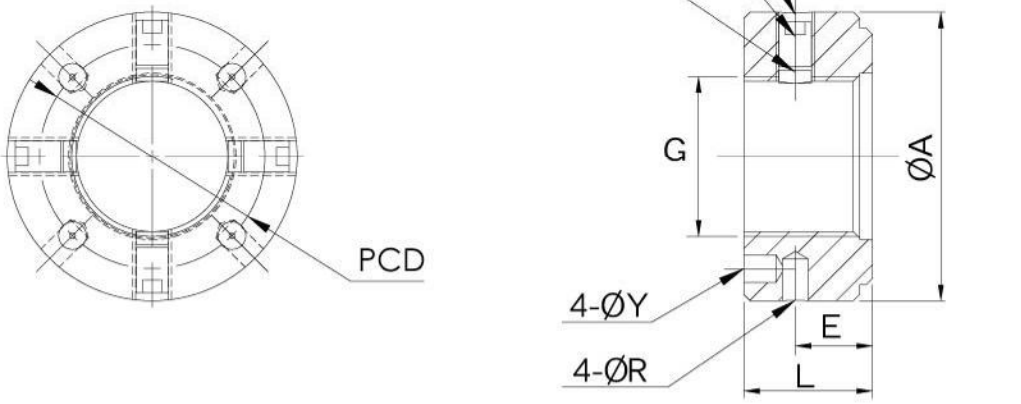

Unit : mm

Model No.	L	E	A	M	Y	R	PCD	G	SPANNER
RN17W RN17W_N	18	10	36	M6	4.3	4	27	M17x1.0	ZL017
RN20W RN20W_N	18	10	40	M6	4.3	4	30	M20x1.0	ZL020
RN25W RN25W_N	20	11	45	M6	4.3	5	30	M25x1.5	ZL025
RN30W RN30W_N	20	11	50	M6	4.3	5	40	M30x1.5	ZL025
RN35W RN35W_N	22	12	55	M6	4.3	5	45	M35x1.5	ZL035
RN40W RN40W_N	22	12	60	M6	4.3	5	50	M40x1.5	ZL040

SBK type support Unit
(heavy-load)

Park No.	Part name	Qty
1	Housing	1
2	Bearing	1 set
3	Holding lid	1
4	Collar	2
5	Seal	2
6	Lock nut	1 set

SBK

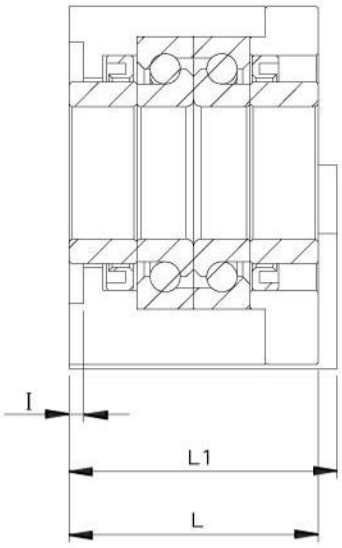

Assembly way DF

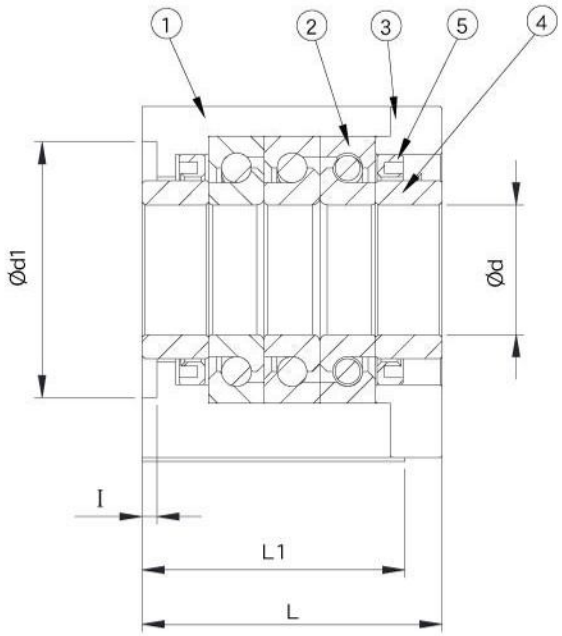

Assembly way DFD

Unit : mm

Model No.	Dimensions of support unit																				Supported side
	d	A	h ±0.02	H1	L	L1	L3	B	d1	E	C2	C1	X	Y	Z	I	V	P	Q	H	
SBK 25DF	25	89	51	53	66	71	18	160	57	130	15.5	40	18	26	2	4	70	M6	10	M6	SF25
SBK 25DFD					81																
SBK 30DF	30	89	51	53	66	71	18	160	57	130	15.5	40	18	26	2	4	70	M6	10	M6	BF30
SBK 30DFD					81																
SBK 35DF	35	96	52	54	66	71	18	160	69	130	15.5	40	18	26	2	4	80	M6	10	M6	BF35
SBK 35DFD					81																
SBK 40DF	40	96	52	54	66	71	18	160	69	130	15.5	40	18	26	2	4	80	M6	10	M6	SF40
SBK 40DFD					81																

Note :
1.Inside bearings use Japanese & Taiwanese P4 grade TAC 60 degree contact ball bearing.
2. The standard type is without H , if required,please advise in advance.

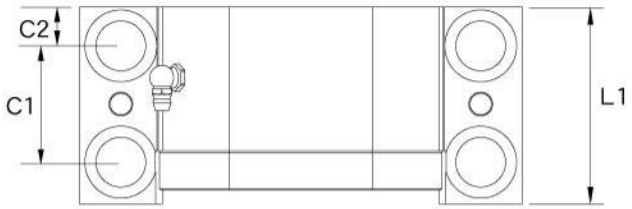

DF

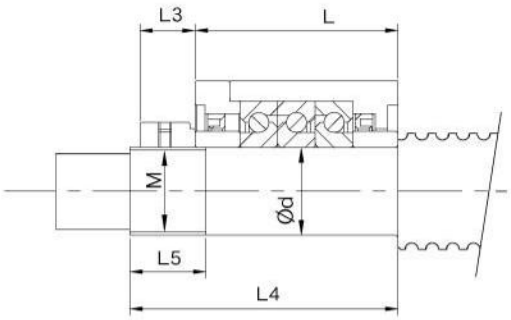

Dimensions of shaft end

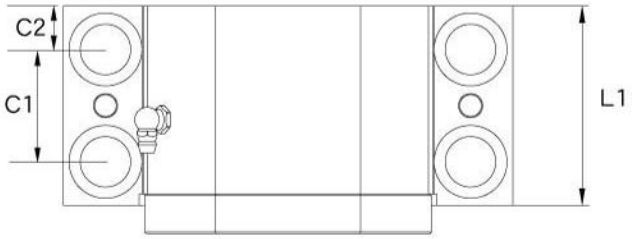

DFD

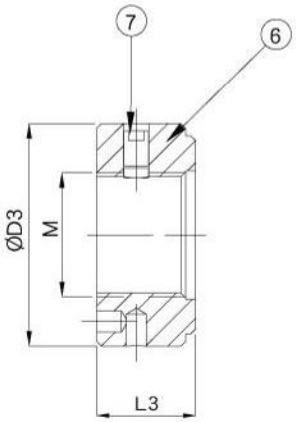

Lock nut

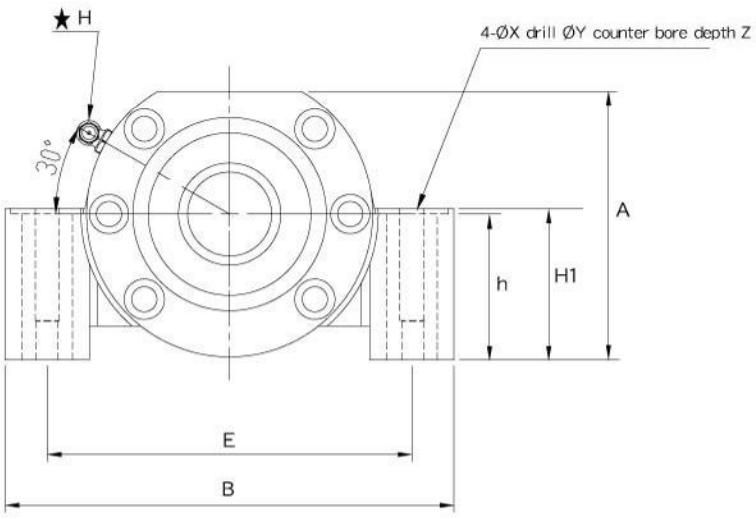

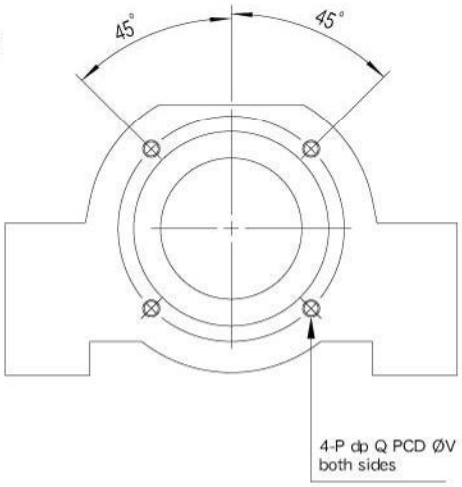

Unit : mm

Model No.	Basic dynamic load rating Ca(kgf)	Permissible axial load (kgf)	Preload (kgf)	Axial rigidity (kgf/um)	Starting torque (kgf-cm)	Lock nut			Weight (Kgs)	Dimensions of shaft end		
						M	D3	L3		d	L4	L5
SBK 25DF	2910	4150	320	100	1.3~2.9	M25X1.5	45	20	4.46	25	89	26
SBK 25DFD	4700	8300	440	150	1.9~4				5.25		104	
SBK 30DF	2980	4400	340	105	1.4~3	M30X1.5	50	20	4.35	30	89	26
SBK 30DFD	4850	8800	460	155	2~4				5.09		104	
SBK 35DF	3150	5100	390	120	1.6~3.5	M35X1.5	55	22	4.57	35	92	30
SBK 35DFD	5150	10200	530	175	2.2~4.6				5.3		107	
SBK 40DF	3250	5300	400	125	1.7~3.7	M40X1.5	60	22	4.6	40	92	30
SBK 40DFD	5250	10600	540	185	2.2~4.7				5.15		107	

WBK type support Unit
(heavy-load)

Park No.	Part name	Qty
1	Housing	1
2	Bearing	1 set
3	Holding lid	1
4	Collar	2
5	Seal	2
6	Lock nut	1 set

WBK

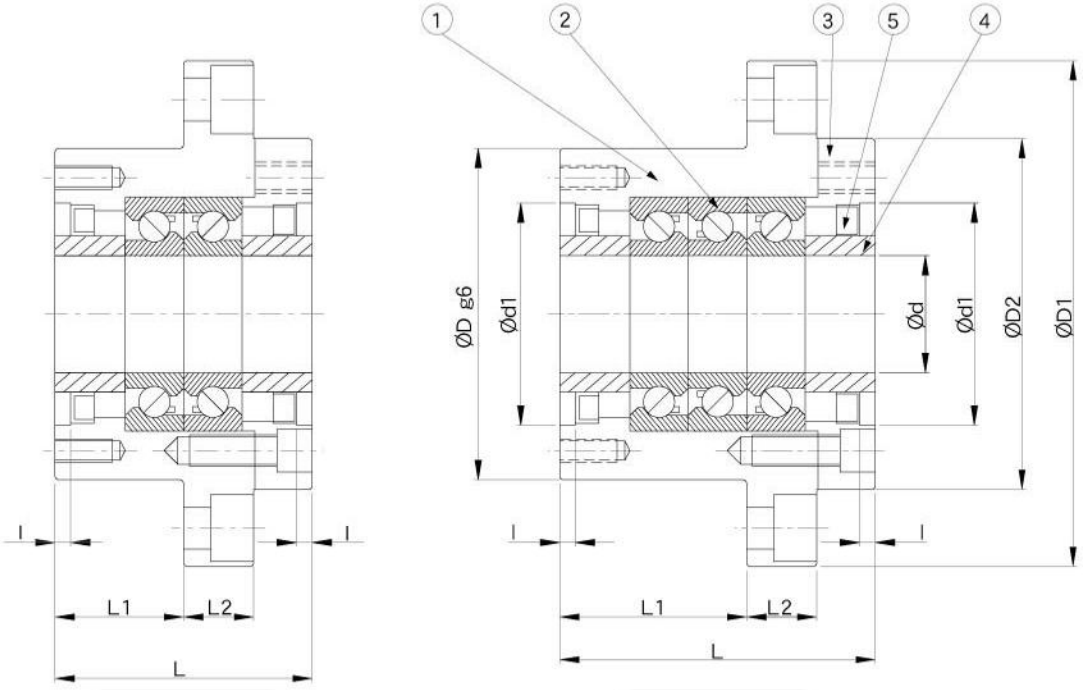

Assembly way DF

Assembly way DFD

Unit : mm

Model No.	Dimensions of support unit																	
	d	D	D1	D2	L	L1	L2	A	W	X	Y	Z	d1	l	V	P	Q	H
WBK 17DF	17	70	106	72	60	32	15	80	88	9	14	8.5	45	3	58	M5	10	M6
WBK 20DF	20	70	106	72	60	32	15	80	88	9	14	8.5	45	3	58	M5	10	M6
WBK 25DF					66	33												
WBK 25DFD	25	85	130	90	81	48	18	100	110	11	17	11	57	4	70	M6	12	M6
WBK 25DFF					96	48												
WBK 30DF					66	33												
WBK 30DFD	30	85	130	90	81	48	18	100	110	11	17	11	57	4	70	M6	12	M6
WBK 30DFF					96	48												
WBK 35DF					66	33												
WBK 35DFD	35	95	142	102	81	48	18	106	121	11	17	11	69	4	80	M6	12	M6
WBK 35DFF					96	48												
WBK 40DF					66	33												
WBK 40DFD	40	95	142	102	81	48	18	106	121	11	17	11	69	4	80	M6	12	M6
WBK 40DFF					96	48												

Note :

1.Inside bearings use Japanese & Taiwanese P4 grade TAC 60 degree contact ball bearing.

2.The standard type is without H , if required,please advise in advance.

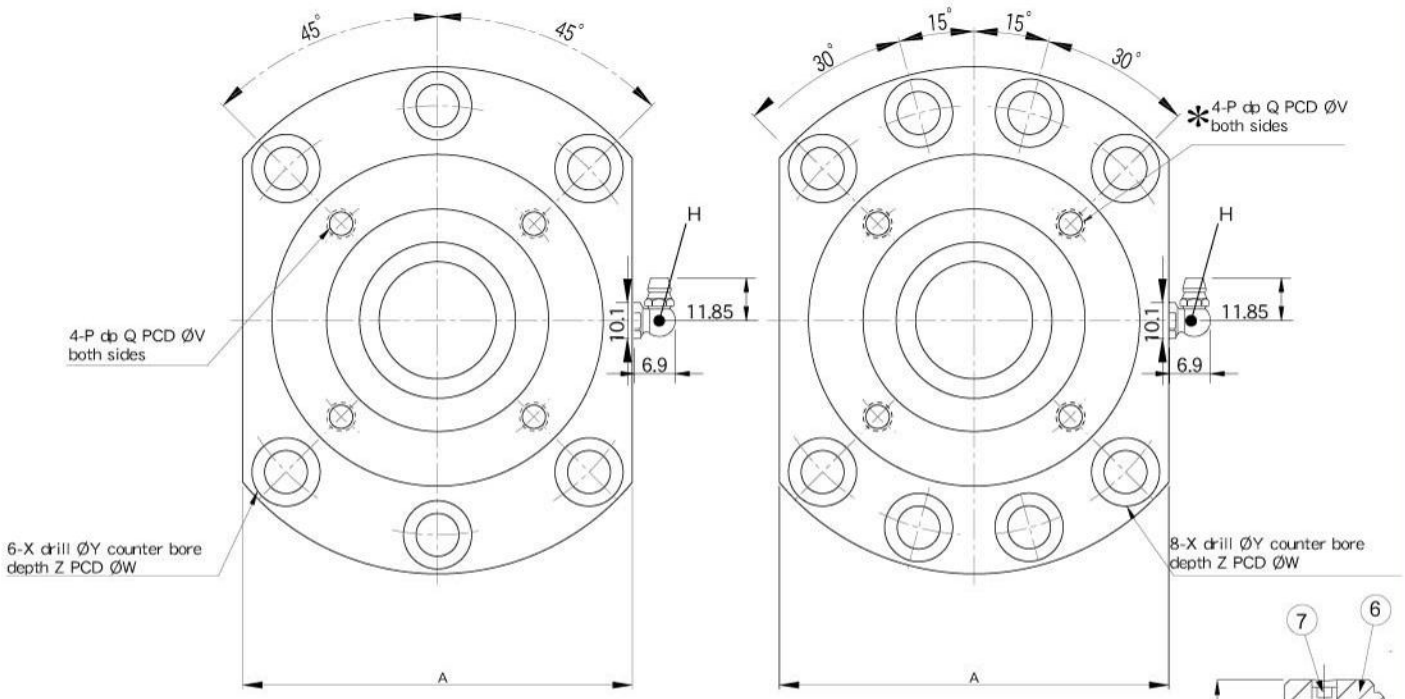

Shaft diameter Ød≦30

Shaft diameter Ød≧35

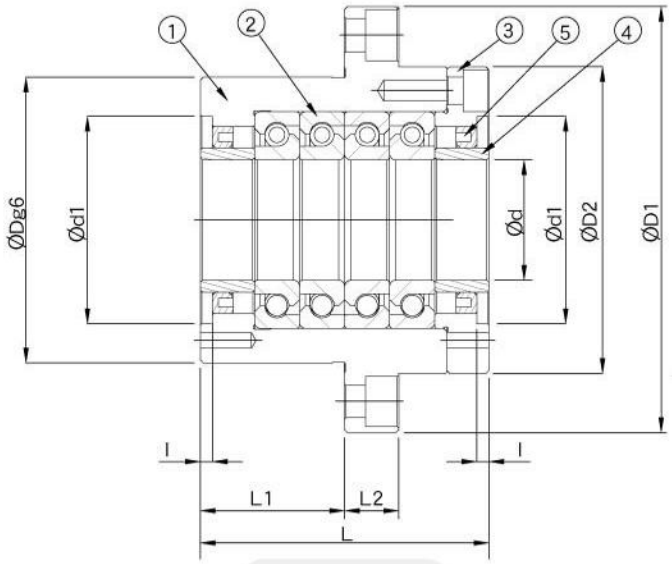

Assembly way DFF

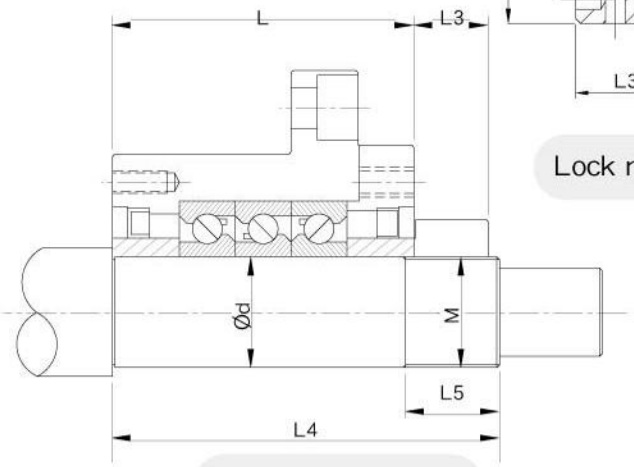

Dimensions of shaft end

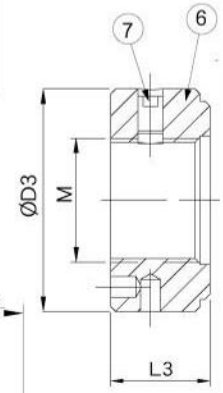

Lock nut

Unit : mm

Model No.	Basic dynamic load rating Ca(kgf)	Permissible axial load (kgf)	Preload (kgf)	Axial rigidity (kgf/um)	Starting torque (kgf-cm)	Lock nut			Weight (Kgs)	Dimensions of shaft end		
						M	D3	L3		d	L4	L5
WBK 17DF	2240	2710	220	75	0.8~1.9	M17X1	37	18	1.24	17	81	23
WBK 20DF	2240	2710	220	75	0.8~1.9	M20X1	40	18	2	20	81	23
WBK 25DF	2910	4150	320	100	1.3~2.9				3.27		89	
WBK 25DFD	4700	8300	440	150	1.9~4	M25X1.5	45	20	3.81	25	104	26
WBK 25DFF	4700	8300	640	200	2.6~5				4.46		119	
WBK 30DF	2980	4400	340	105	1.4~3				3.18		89	
WBK 30DFD	4850	8800	460	155	2~4	M30X1.5	50	20	3.7	30	104	26
WBK 30DFF	4850	8800	680	205	2.7~5.2				4.3		119	
WBK 35DF	3150	5100	390	120	1.6~3.5				3.79		92	
WBK 35DFD	5150	10200	530	175	2.2~4.6	M35X1.5	55	22	4.45	35	107	30
WBK 35DFF	5150	10200	780	240	2.9~6				5.21		122	
WBK 40DF	3250	5300	400	125	1.7~3.7				3.65		92	
WBK 40DFD	5250	10600	540	185	2.2~4.7	M40X1.5	60	22	4.27	40	107	30
WBK 40DFF	5250	10600	800	245	2.9~6.2				5		122	

Note :

3.Dimensinons with ✻ mark can be used for dust cover and damper installation.
About Its correct position, please contact SYK.

MBK type suppory Unit (heavy-load)

Park No.	Part name	Qty
1	Housing	1
2	Bearing	1 set
3	Holding lid	1
4	Collar	2
5	Seal	2
6	Lock nut	1 set

Motor Bracket

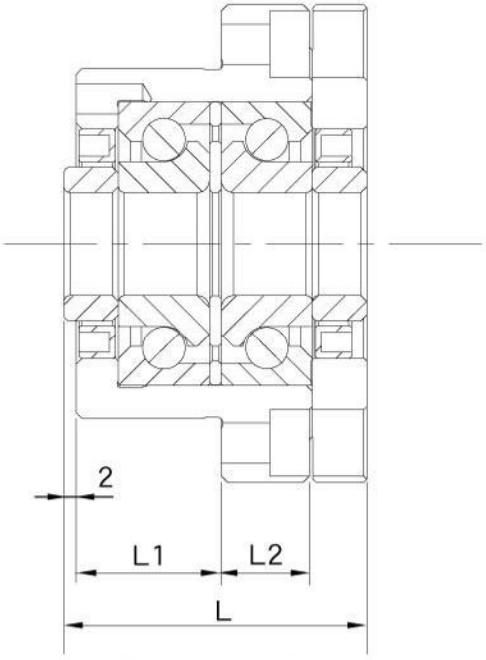

Assembly way DF

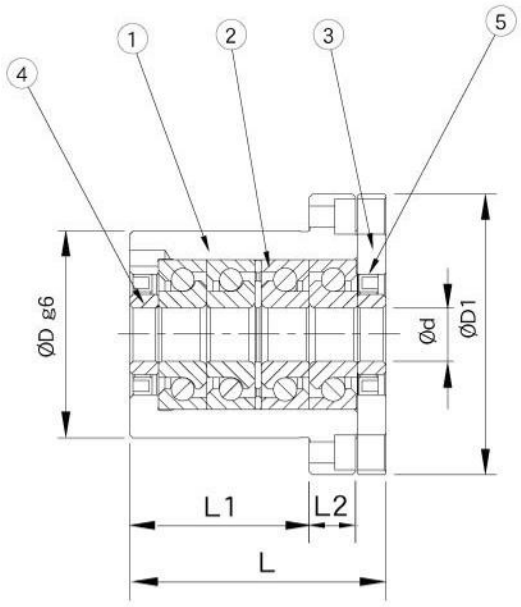

Assembly way DFF

Unit : mm

Model No.	Dimensions of support unit											
	d	D	D1	L	L1	L2	A	W	X	Y	Z	H
MBK 15DF - G	15	58	79	50	24	14.5	79	66	6.6	11	7	M6
MBK 17DF - G	17	58	79	50	24	14.5	79	66	6.6	11	7	M6
MBK 17DFF - G		65	88	80	56		88	74				
MBK 20DF - G	20	58	79	50	24	14.5	79	66	6.6	11	7	M6
MBK 20DFF - G		65	88	80	56		88	74				

Note :

1.Inside bearings use Japanese & Taiwanese P4 grade TAC 60 degree contact ball bearing.

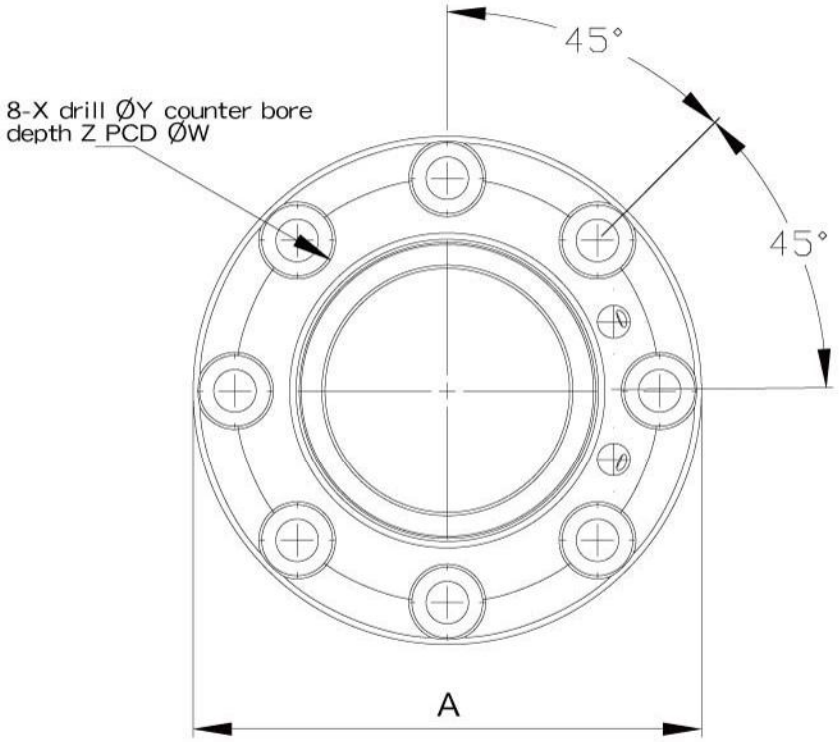

Shaft diameter Ød≦20

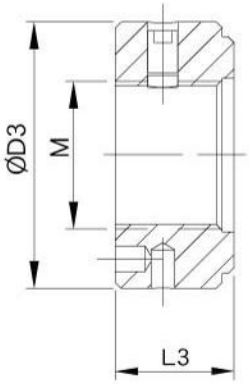

Lock nut

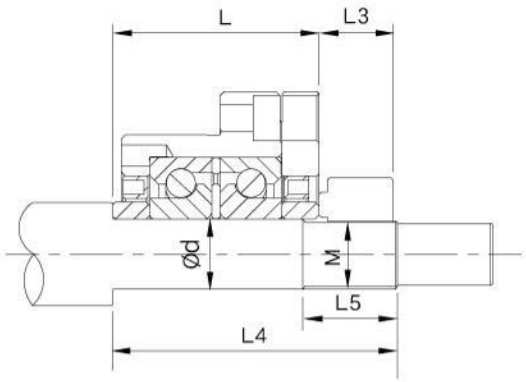

DF
Dimensions of shaft end

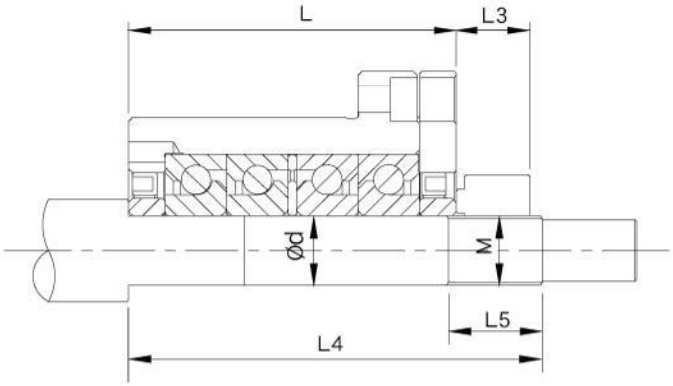

DFF
Dimensions of shaft end

Unit : mm

Model No.	Basic dynamic load rating Ca(kgf)	Permissible axial load (kgf)	Preload (kgf)	Axial rigidity (kgf/um)	Starting torque (kgf-cm)	Lock nut			Weight (Kgs)	Dimensions of shaft end		
						M	D3	L3		d	L4	L5
MBK 15DF	2240	2710	220	75	0.8~1.9	M15X1	-	-	1.44	15	69	23
MBK 17DF	2240	2710	220	75	0.8~1.9	M17X1	37	18	1.55	17	69	23
MBK 17DFF	3620	5420	440	145	1.7~3.3				2.3		101	
MBK 20DF	2240	2710	220	75	0.8~1.9	M20X1	40	18	1.52	20	69	23
MBK 20DFF	3620	5420	440	145	1.7~3.3				2.78		101	

Nut Bracket

MC

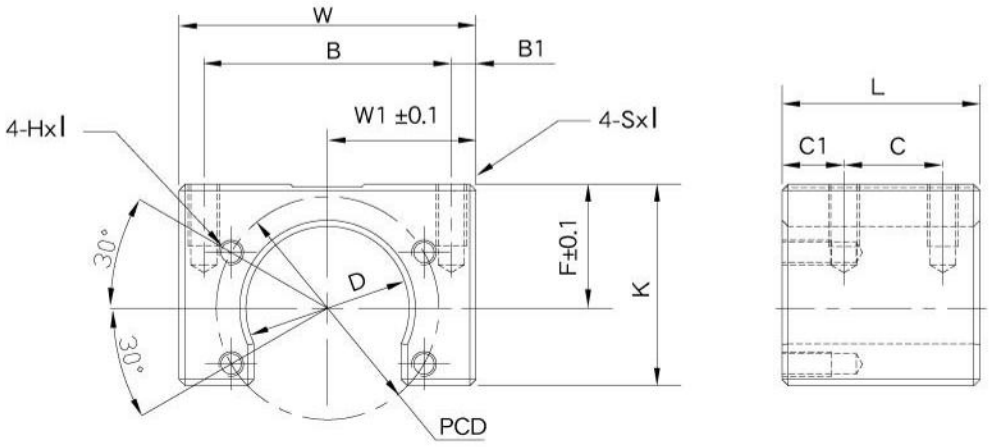

Unit : mm

Model No.	Width W	W1	B	B1	Overall Length L	C	C1	F	K	D	PCD	Sxl	Hxl	Far factory automation equipment Supported Ball Screw models	Weight (Kgs)
MC 1004	48	24	40	4	32	16	10	20	32.5	26.4	36	M5x0.7x7	M4x0.7x7	BNK1004、BNK1005	0.24
MC 1205	60	30	47	6.5	36	24	6	21	37	30.4	40	M6x12	M4x0.7x7	BNK1205	0.38
MC 1408	60	30	50	5	36	20	10	21.5	37	34.4	45	M6x12	M5x0.8x7	BNK1408、BNK1510 BNK1520、BNK1616	0.34
MC 2010	86	43	70	8	50	30	10	31	54	46.4	59	M10x20	M6x10	BNK2010	1.04
MC 2020	86	43	70	8	40	24	8	28	51	39.4	59	M10x20	M6x10	BNK2020	0.83

Application table of MC Nut bracket for ballscrew manufacturer.

Model No.	Ballscrew manufacturer					
	THK	NSK	HIWIN	PMI	COMTOP	GTEN
MC 1004	BNK1004,BNK1005	W1004 FA,	R1004FSW	FSIW1404,FSIC1403 FSIC1404,FSIC1405		FSI1404,FSI1405
MC1205	BNK1205 BNK1205	W1205 FA,W1210 FA	R1205FSW,R1210FSW	FSWW1204 ,FSWC1204/05 FSWC1210,PTR1205/10/20	XSVR1210	FSC1210
MC 1408	BNK1408,BNK1510 BNK1520,BNK1616	W1405 FA,W1408 FA W1510 FA,W1520 FA W1616 FA,W1632 FA	R1405FSW,R1408FSW FSW1510,R1510DFSH R1520DFSH,R1520FSH,R1632DFSH	FSIC2005/06,FSWC1405 FSWC1510,FSKC1520 PTR1505/10/20	SFI 1610,SFI 2004 SFI 2005 XSVR1510,XSVR1520	FSI1610,FSI2005 FSC1520
MC 2010	BNK2010	W2010 FA,W2020 FA	R2010FSW,R2020FSW	FSWC2010,PTR2010	XSVR2010,XSVR2020	FSC2010
MC 2020	BNK2020		R 2020DFSH			

Nut Bracket

MGD

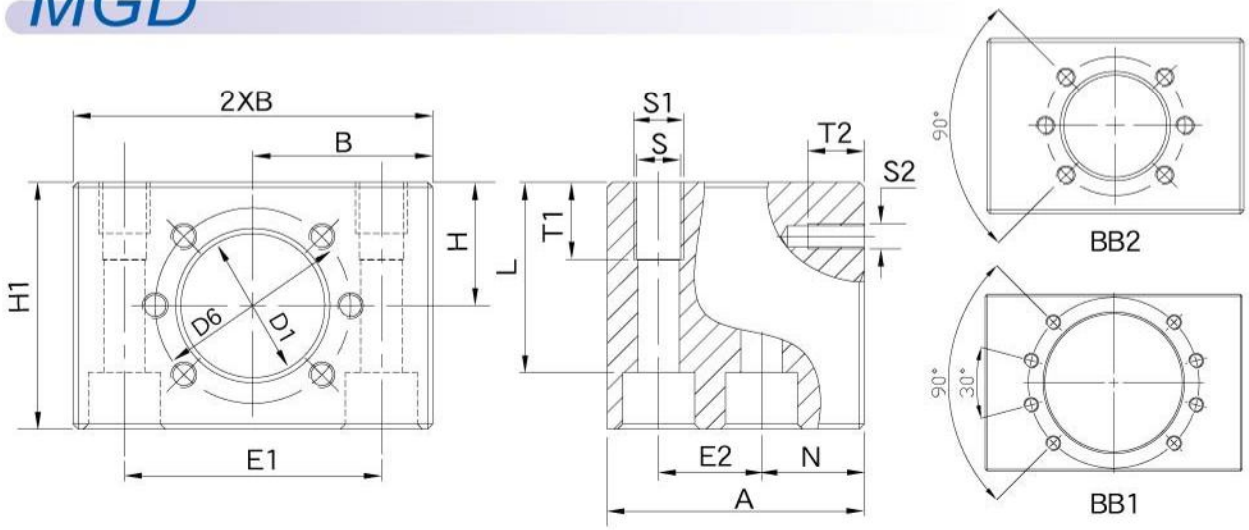

Unit : mm

Model No.	Size	d_0xP	Part number	D1±0.1	D6	A	B±0.1	H±0.1	H1	E1	E2	N	S	S1	T1	S2	T2		ISO4762	L	Weight (Kgs)
MGD 16	16×5 16×16	16×10	1506-0-0050	28.4	38	50	35	24	48	50±0.1	20±0.1	20	8.4	M10	15	M5	10	BB2	M8	37	0.91
MGD 20	20×5	20×20	1506-1-0050	36.4	47	55	37.5	28	56	55±0.1	23±0.1	22	8.4	M10	15	M6	11	BB2	M8	45	1.18
MGD 25	25×5 25×25	25×10	1506-2-0050	40.4	51	55	40	30	58	60±0.1	23±0.1	22	8.4	M10	15	M6	11	BB2	M8	49	1.33
MGD32S	32×5	32×10	1506-3-0050	50.4	65	70	45	35	70	70±0.1	45±0.1	12.5	-	M12	20	M8	14	BB2	M12	-	2.5
MGD 32	32×20	32×32					50		68	75±0.1	30±0.1	27	13	M16					M12	52	2.77
MGD 40	40×5 40×12 40×20	40×10 40×16 40×40	1506-4-0050	63.4	78	80	60	42	84	90±0.1	35±0.1	31	15	M18	25	M8	17	BB1	M14	66	3.61

Application table of MC Nut bracket for ballscrew manufacturer.					
Model No.	Ballscrew manufacturer				
	STAR	HIWIN	PMI	COMTOP	GTEN
MGD 16	1502,1512-0-****	FSI-16-05	FSIN-16-05	SFU 1605	FSU 1605
MGD 20	1502,1512-1-****	FSI-20-05	FSIN-20-05	SFU 2005	FSU 2005
MGD 25	1502,1512-2-****	FSI-25-05	FSIN-25-05	SFU 2505	FSU 2505
		FSI-25-10	FSIN-25-10	SFU 2510	FSU 2510
MGD 32	1502,1512-3-****	FSI-32-05	FSIN-32-05	SFU3205	FSU 3205
		FSI-32-10	FSIN-32-10	SFU 3210	FSU 3210
MGD 40	1502,1512-4-****	FSI-40-05	FSIN-40-05	SFU4005	FSU 4005
		FSI-40-10	FSIN-40-10	SFU 4010	FSU 4010

Recommended shaft end shape(Fixed-side) for Support Units types BK

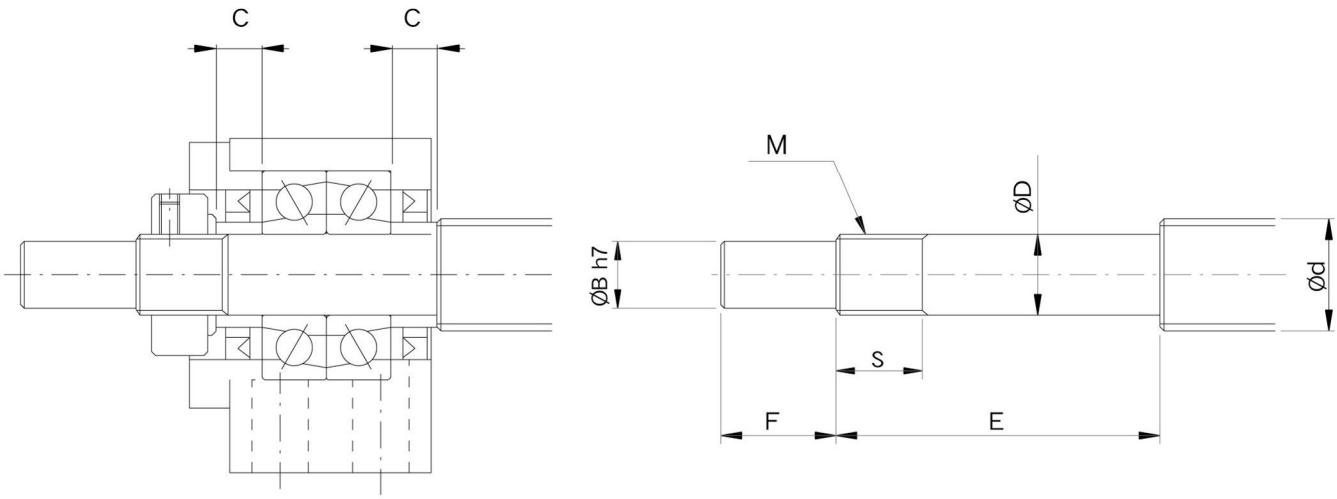

Type BK

Unit : mm

Support unit model No.	Ballscrew shaft OD	Shaft support portion OD					Metric screw thread		Length of Sleeve
BK型 Type BK	d	D		B	E	F	M	S	C
BK10	12/14/15	10	-0.008 -0.015	8	36	15	M10×1	12	5.5
BK12	14/15/16	12	-0.008 -0.017	10	36	15	M12×1	12	5.5
BK15	18/20	15	-0.008 -0.017	12	40	20	M15×1	12	6
BK17	20/25	17	-0.008 -0.017	15	53	23	M17×1	17	7
BK20	25/28	20	-0.010 -0.020	17	53	25	M20×1	15	8
BK25	32/36	25	-0.010 -0.020	20	66	30	M25×1.5	20	9
BK30	36/40	30	-0.010 -0.020	25	73	38	M30×1.5	25	9
BK35	45	35	-0.012 -0.025	30	82	45	M35×1.5	26	12
BK40	50	40	-0.012 -0.025	35	94	50	M40×1.5	30	15

Recommended shaft end shape(Fixed-side) for Support Units types FK,FKA,EK,AK,LK

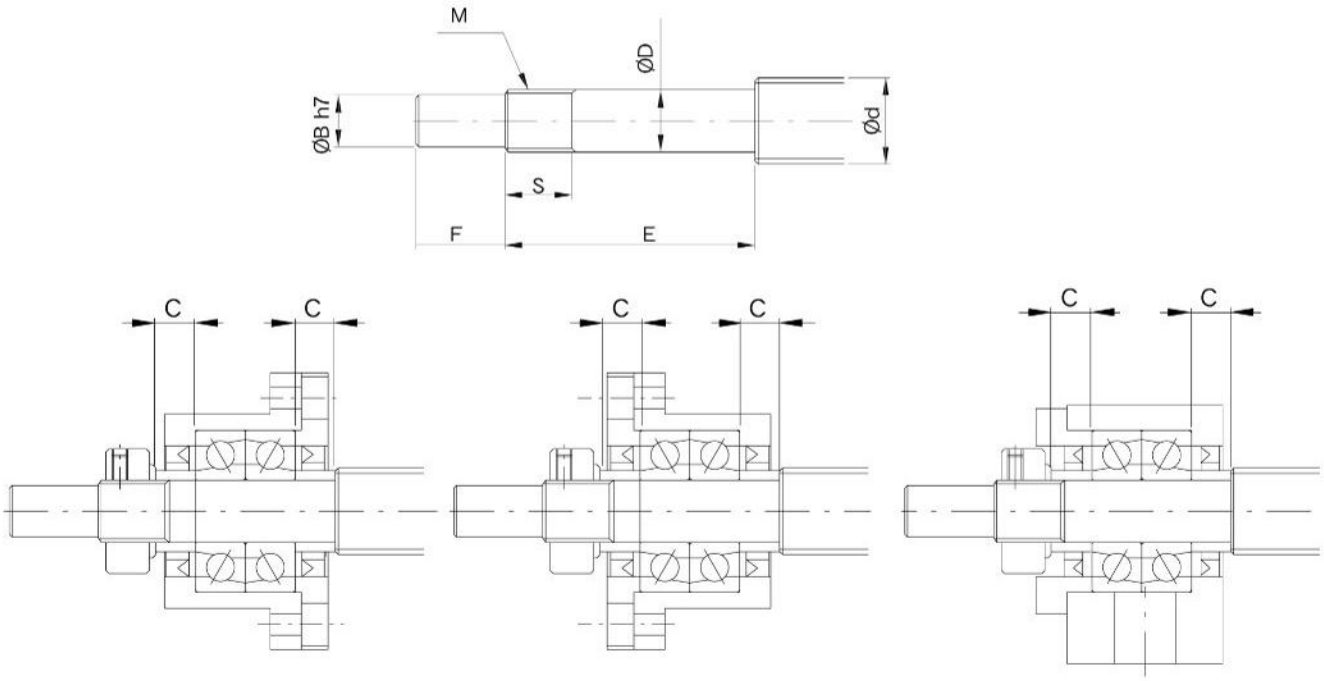

Type FK,FKA　　Type FK,FKA　　Type EK,AK,LK

Unit : mm

Support unit model No.				Ballscrew shaft OD	Shaft support portion OD					Metric screw thread		Length of Sleeve
FK FKA 型 Type FK,FKA	EK型 Type EK	AK型 Type AK	LK型 Type LK	d	D		B	E	F	M	S	C
FK05	EK05	-	-	8	5	-0.008 -0.015	4	23	6	M5×0.5	7	3.5
	EK06	-	-	8	6	-0.008 -0.015	4	28	8	M6×0.75	8	5
FK08 FKA08	EK08	-	LK08	10/12	8	-0.008 -0.015	6	32	9	M8×1	10	5.5
FK10 FKA10	EK10	AK10	LK10	12/14/15	10	-0.008 -0.015	8	36	15	M10×1	12	5.5
FK12 FKA12	EK12	AK12	LK12	14/15/16	12	-0.008 -0.017	10	36	15	M12×1	12	5.5
FK15 FKA15	EK15	AK15	LK15	18/20	15	-0.008 -0.017	12	48	20	M15×1	13	10
FK17	-	-	-	20/25	17	-0.008 -0.017	15	59	23	M17×1	17	10
FK20 FKA20	EK20	AK20	-	25/28/30	20	-0.010 -0.020	17	64	25	M20×1	16	11
FK25	-	AK25	-	30/32/36	25	-0.010 -0.020	20	73	30	M25×1.5	20	14
FK30	-	-	-	36/40	30	-0.010 -0.020	25		38	M30×1.5	25	9

Recommended shaft end shape(Supported-side) for Support Units types FF,EF,BF,AF,LF

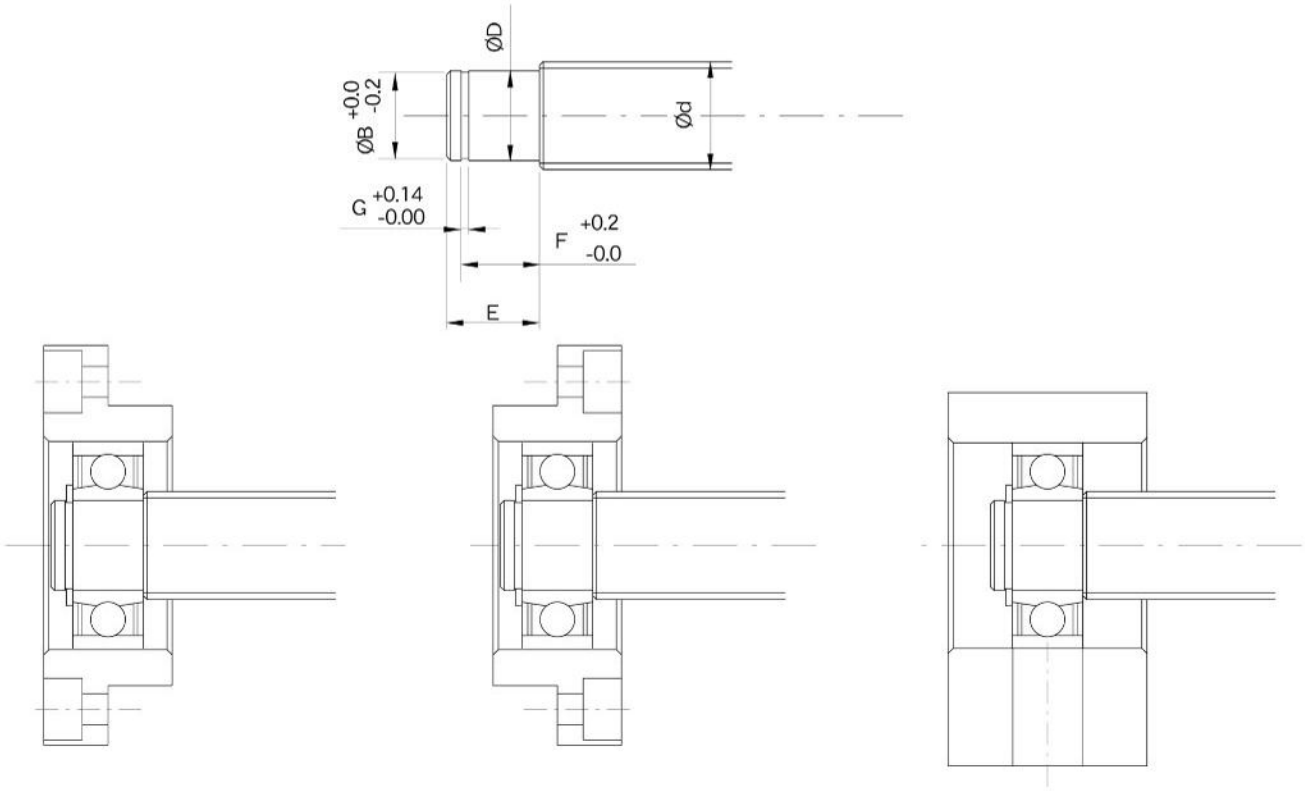

Type FF　　Type FF　　Type EF,BF,AF,LF

Support unit model No.					Ballscrew shaft OD	Shaft support portion OD					
Type FF	Type EF	Type BF	Type AF	Type LF	d	D		E	B	F	G
FF06	EF06	-	-	-	8	6	-0.008 -0.015	9	5.7	6.8	0.8
-	EF08	-	-	LF08	10	6	-0.008 -0.015	9	5.7	6.8	0.8
FF10	EF10	BF10	AF10	-	12/14/15	8	-0.008 -0.015	10	7.6	7.9	0.9
FF12	EF12	BF12	AF12	LF12	14/15/16	10	-0.008 -0.015	11	9.6	9.15	1.15
FF15	EF15	BF15	AF15	LF15	18/20	15	-0.008 -0.017	13	14.3	10.15	1.15
FF17	-	BF17	-	-	20/25	17	-0.008 -0.017	16	16.2	13.15	1.15
FF20	EF20	Note(BF20)	AF20	-	25/28/30	20	-0.010 -0.020	19(16)	19	15.35(13.35)	1.35
FF25	-	BF25	AF25	-	30/32/36	25	-0.010 -0.020	20	23.9	16.35	1.35
FF30	-	BF30	-	-	36/40	30	-0.010 -0.020	21	28.6	17.75	1.75
-	-	BF35	-	-	40/45	35	-0.012 -0.025	22	33	18.75	1.75
-	-	BF40	-	-	50	40	-0.012 -0.025	23	38	19.95	1.95

Ballscrew support unit equivalent interchangeable for major manufacturer

SYK & T*K
BK10
BK12
BK15
BK17
BK20
BK25
BK30
BK35
BK40

SYK&T*K	KU**DA	N*K	MI**MI
EK05	-	-	-
EK06	BUK-6	WBK06-01A	BSW06
EK08	BUK-8F	WBK08-01A	BSW08
EK10	-	-	-
EK12	-	-	-
EK15	-	-	-
EK20	-	-	-

SYK&T*K	KU**DA	N*K	MI**MI
FK05	-	-	-
FK06	-	WBK06-11	BRW06
FK08	BUM-8	WBK08-11	BRW08
FK10	BUM-10	WBK10-11	BRW10
FK12	BUM-12	WBK12-11	BRW12
FK15	BUM-15	WBK15-11	BRW15
FK17	-	-	-
FK20	BUM-20	WBK20-11	BRW20
FK25	BUM-25	WBK25-11	BRW25
FK30	-	-	-

BF10
BF12
BF15
BF17
BF20
BF25
BF30
BF35
BF40

EF06	-	-	BUN06
EF08	BUK-6S	WBK08S-01	BUN08
EF10	-	-	BUN10
EF12	-	-	BUN12
EF15	-	-	-
EF20	-	-	BUN20

FF06	-	-	BUR06
FF10	-	-	BUR10
FF12	-	-	BUR12
FF15	-	-	BUR15
FF17	-	-	-
FF20	-	-	BUR20
FF25	-	-	BUR25
FF30	-	-	-

SYK	KU**DA	N*K	MI**MI
AK10	BUK-10F	WBK10-01A	BSW10
AK12	BUK-12F	WBK12-01A	BSW12
AK15	BUK-15F	WBK15-01A	BSW15
BK17	-	WBK17-01A	-
AK20	BUK-20F	WBK20-01	BSW20
AK25	BUK-25F	WBK25-01	BSW25

AF10	BUK-8S	WBK10S-01	-
AF12	BUK-10S	WBK12S-01	-
AF15	BUK-15S	WBK15S-01	-
BF17	-	WBK17S-01	-
AF20	BUK-20S	WBK20S-01	-
AF25	BUK-25S	WBK25S-01	BUN25

SYK	N*K
WBK 17DF	WBK 17DF-31
WBK 20DF	WBK 20DF-31
WBK 25DF	WBK 25DF-31
WBK 25DFD	WBK 25DFD-31
WBK 30DF	WBK 30DF-31
WBK 30DFD	WBK 30DFD-31
WBK 35DF	WBK 35DF-31
WBK 35DFD	WBK 35DFD-31
WBK 40DF	WBK 40DF-31
WBK 40DFD	WBK 40DFD-31

SYK	N*K	P*I
LK08	WBK08-01B	-
LK10	WBK10-01B	-
LK12	WBK12-01B	PBKN12
LK15	WBK15-01B	PBKN15
AK20	WBK20-01	PBKN20
LF08	WBK08S-01B	-
LF12	WBK12S-01B	-
LF15	WBK15S-01B	-
LFA12	WBK12SF-01	PBFN12
LFA15	WBK15SF-01	PBFN15
LFA20	WBK20SF-01	PBFN20
LFA25	WBK25SF-01	PBFN25

Axial positioning repeatability test

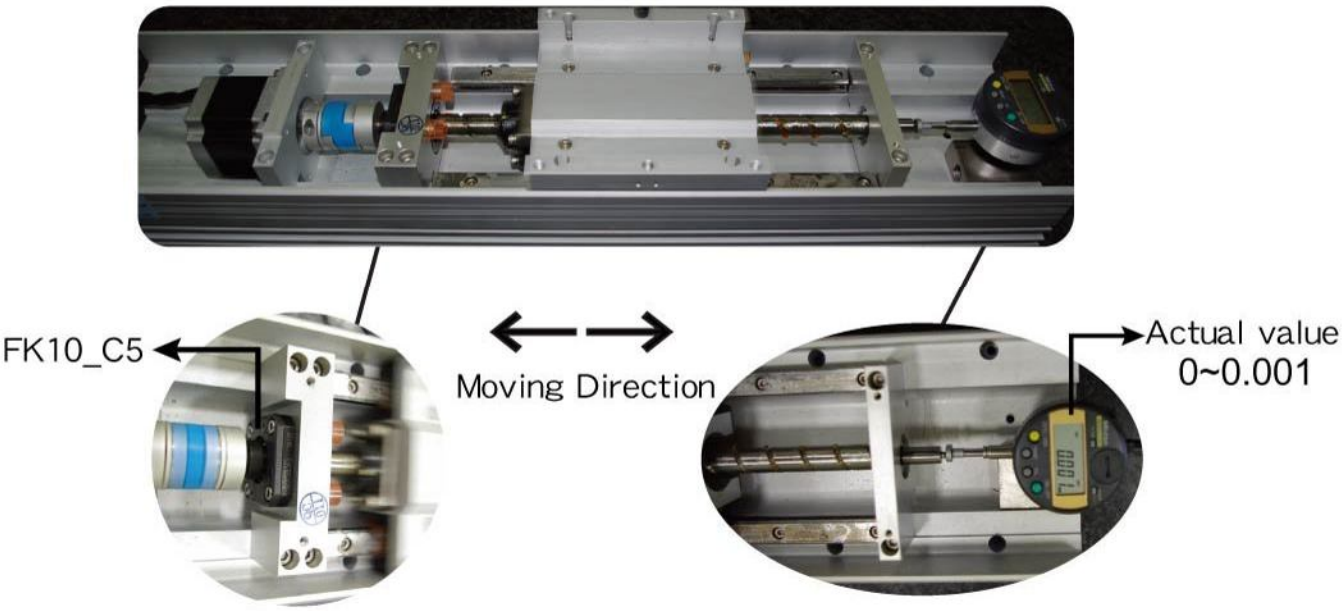

Axial positioning repatability illustration

Manual

The C5 grade support unit use precision angular contact ball bearings and with axial preload. It is not only can enhance the rigidity for the system, but also can have better positioning repeatability and positioning accuracy for machinery.It is indispensable for high accuracy equipment or machinery.

Thrust Testing

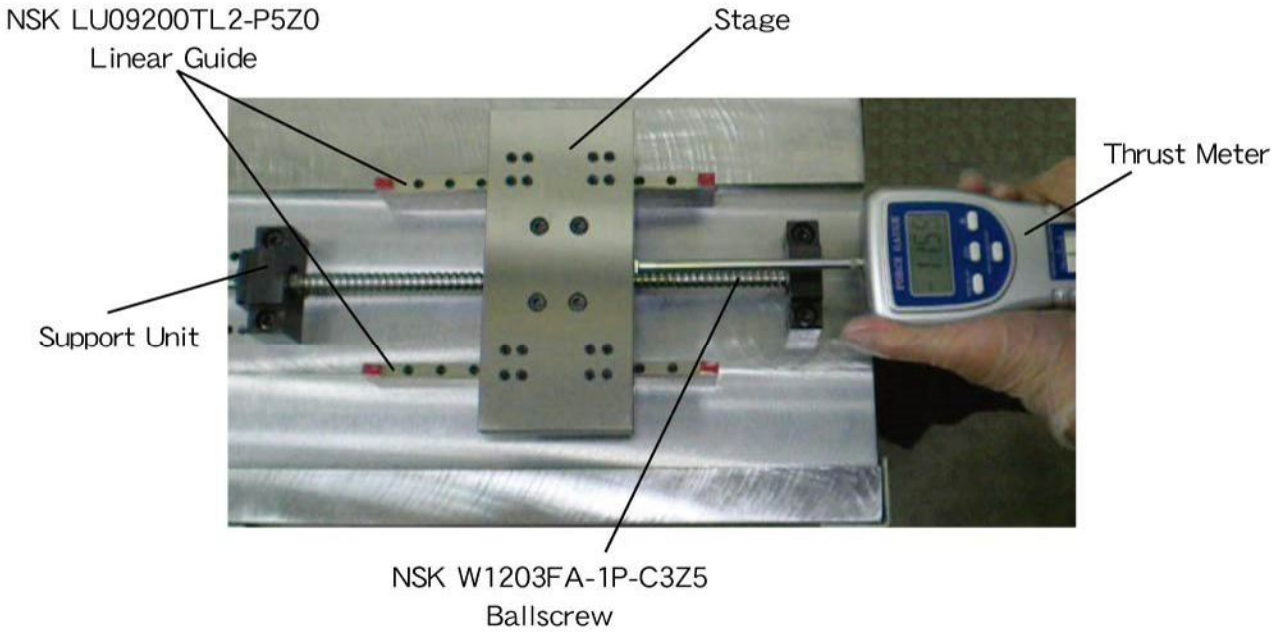

Objective

In order to obtain optimal bearings starting torque, It is very important to control fixed-side support unit in appropriate preload. Under identical motor running condition , It will get optimal starting torque value .. Following are results .

Note

There are axial clearance and weakness rigidity problem for bearings without or insufficient preload.

Too great a preload on bearings can lead to overheating , and increase staring torque of the bearing. Therefore , It lead to reduce out efficiency for motor operation. It also causes increasing bearing temperature and reducing Bearing life.

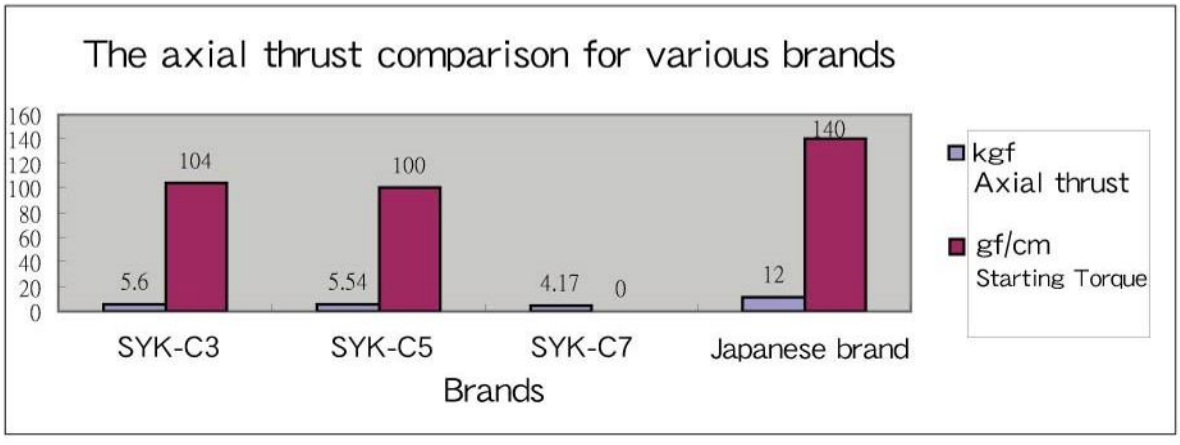

Salt Spray Test (72 Hours)

Objective

Detection of nickel-plating surface of support unit the ability of anti-salt spray corrosion.

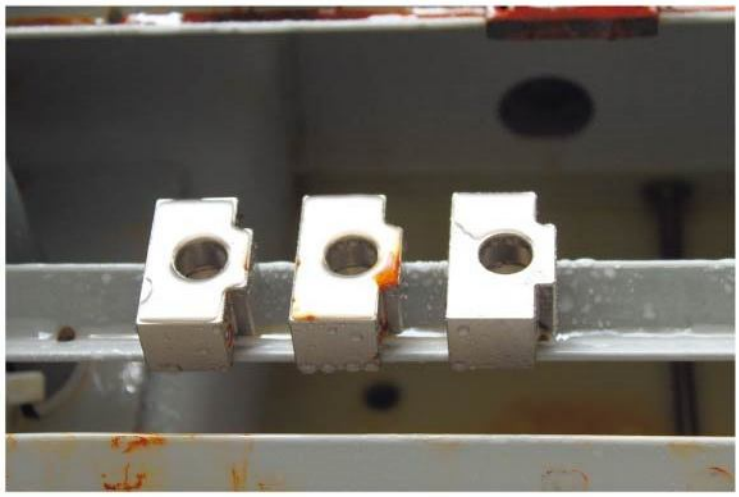

Manual

Salt spray test is a major use of salt spray test equipment created by the artificial analog to assess environmental conditions, salt spray product or metallic materials resistant to corrosion environmental tests.

Artificial analogy environmental test using a certain volume of space,test equipment-salt spray test box. By artificial way to evaluation the product quality and corrosion resistance to salt spray environment.

Exposure in a natural environment, a product sample under test,until their corrosion may take a year, while in the artificial environment, under the conditions of salt spray test analog, as long as 24 hours, you can get similar results.

Patent Product: Support Unit
(Type of Dropping Oil from Center)

Before dropping oil

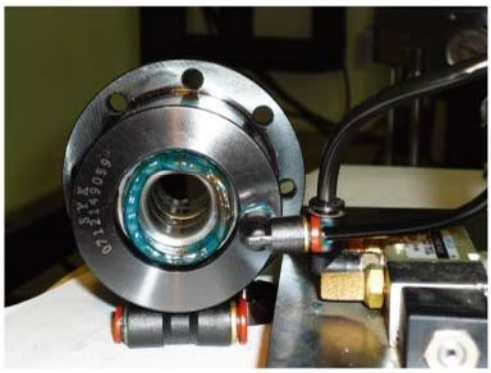

After dropping oil

1. Quick Infiltration
The Support Unit is with the structure of dropping oil from center.
Because of the special structure, adding lubricating oil becomes easier.
Infiltrate quickly.

2. It's Easy to Changing Old Lubricating Oil
Lubricating oil is easy to be infiltrated to each bearing. Besides that,
you can just push the old lubricating oil from the inside part of each bearing,
then you can easy to change old lubricating oil periodically.

3. Increasing Lubrication and Decreasing Friction
Because of quick infiltration and easy changing old lubricating oil periodically,
it can prevent the increase in frictional temperature and the decrease in friction
of bearing. It is very convenient and useful.

Bearings Life Testing

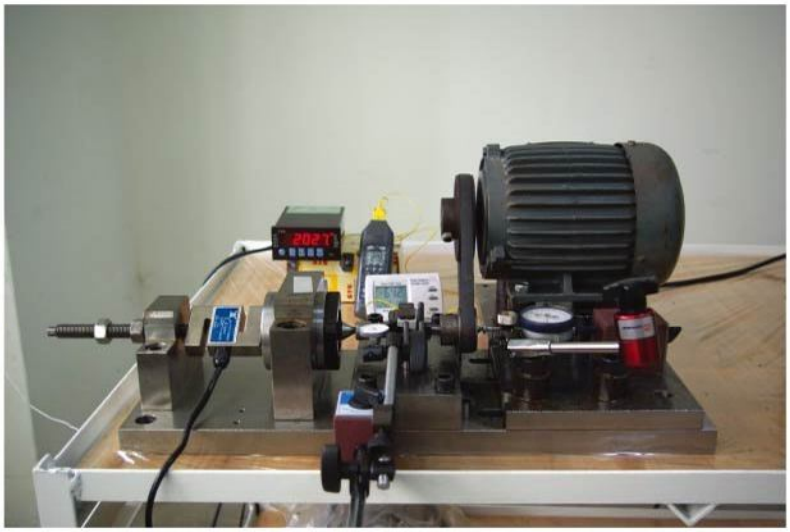

Objective

To get results of bearings life for various brands .

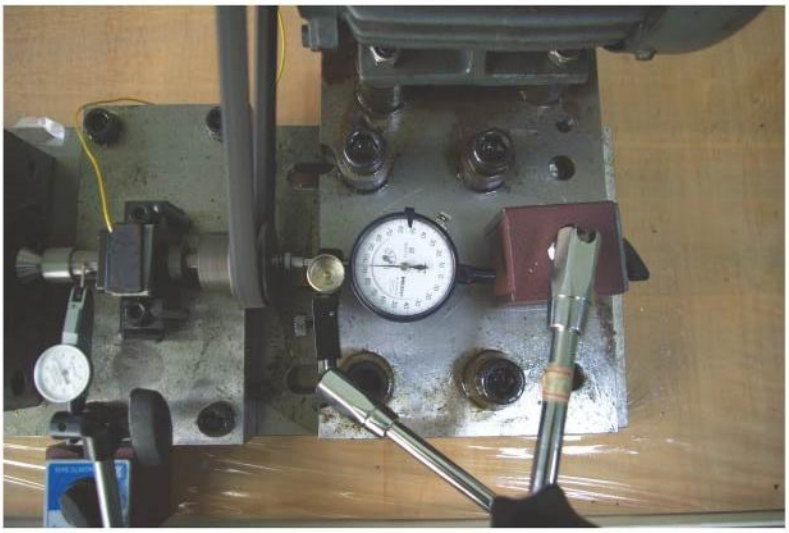

Note

It needs a long time to get the results in normal condition. This test adopted to force maximum axial load on bearings for various brands to get the results in short time , Accordingly, this variation in life is considered statistically ,and calculated life test results.

Assembly room

Manufacturing site

Warehouse
Area 800㎡

2011/02/15 13:31

VAST

MARPOSS
MARPOSS

ZEISS
VAST

Our measure equipment

ZEISS

CMM, ZEISS, Germany

TRIMOS

2D Measuring machine ,
TRIMOS,Switzerland

AA210256043-T

Laser carving manufacturing series number on products.It can be traceable quality of products.

全員參與 ISO9001
堅持品保 追求卓越

Customer First · Ensure Quality

Pursue Excellence · Persistent Management

All images and words in the catalogue is for reference only,
the company have the rights to change without prior notice.